H2TN 2" Aluminum Horizontal Blinds

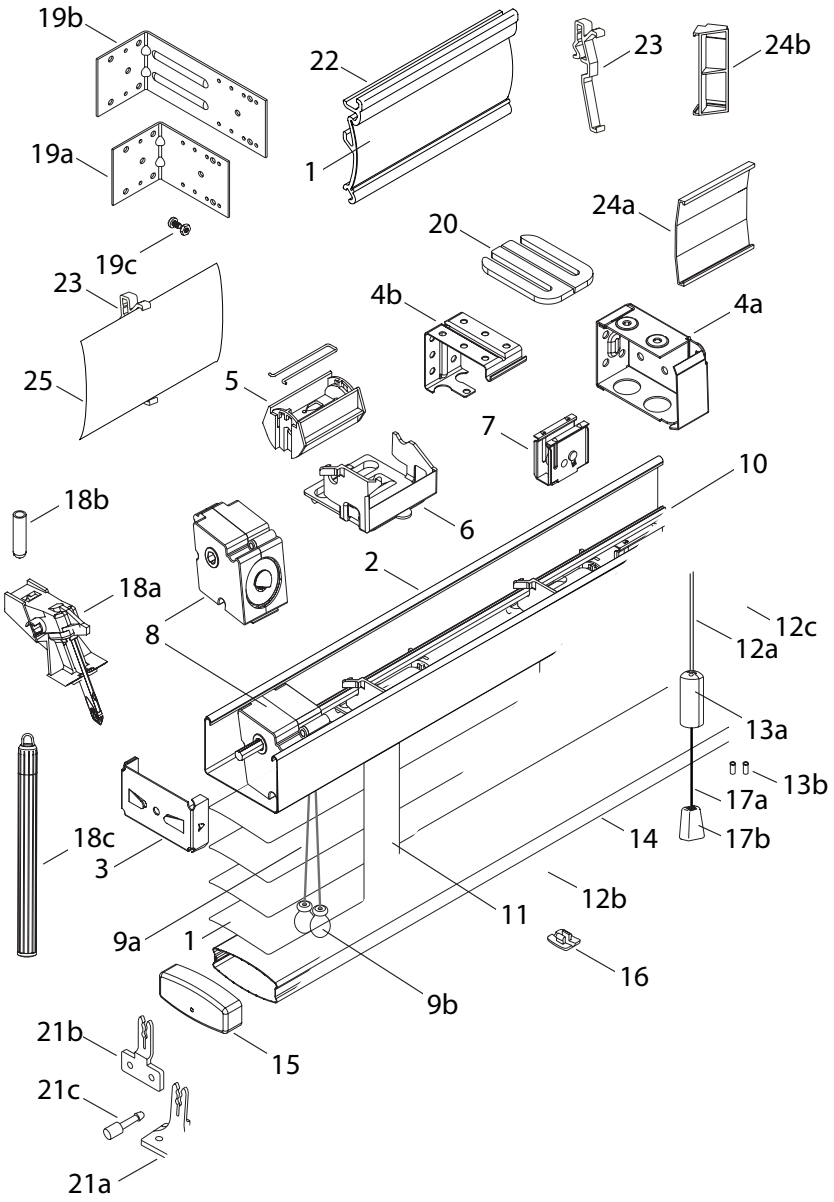

STANDARD COMPONENTS:

1. Slat
2. Headrail
3. Headrail End Lock
4a. Installation Bracket
4b. Intermediate Support Bracket
5. Tape Roll
6. Tape Roll Support
7. Cordlock
8. Cord Tilter
9a. Tilt Cord 2.2mm
9b. Tilter Tassels
10. Tiltrod
11. Cable Tape
12a. Lift Cord 2.2mm
12b. Lift Cord Grommet
12c. Safety Cord Stop
13a. Cord Stop
13b. Safety Tassel Grommet
14. Bottom Rail
15. Bottom Rail End Cap
16. Tape Button
17a. Lift Cord
17b. Universal Cover/Tassel

OPTIONAL COMPONENTS:

18a. Wand Tilter
18b. Tilter Protector
18c. Wand
19a. Short Extension Bracket
19b. Long Extension Bracket
19c. Extension Bracket Screw and Nut
20. Bracket Shim
21a. Hold-Down Bracket (Sill)
21b. Hold-Down Bracket (Jamb)
21c. Hold-Down Pin
22. Optional Valance
23. Valance Clip
24a. Valance Splice
24b. Valance Corner Clip
25. Standard Valance

HunterDouglas
Architectural