RB 500 Roller Shades Specification Catalog

HunterDouglasContract

WINDOW COVERINGS

Hunter Douglas Contract RB 500 Roller Shades provide an excellent solution for controlling light and glare. Versatile, distinctive, and cost-effective, our line includes a wide range of fabrics, mounted on high-quality hardware.

KEY FEATURES

- Heavy-duty metal clutch provides smooth and easy lift capabilities.
- Modular operating system accommodates chain, crank and motorized applications.
- Universal spring-loaded end plug mounts shades securely and allows for easy installation.
- Counterbalance weight system provides ease of lifting for large shades.
- Standard clutch system provides universal mounting capabilities (left or right).
- Roller tubes engineered to span large windows.
- Heavy-duty chain with 110-pound breaking strength.
- Aluminum designer installation brackets.

CONTENTS

2 SIZE STANDARDS
3 APPLICATIONS
4 HARDWARE COLORS
5 MANUAL ROLLER SHADES
44 MOTORIZED ROLLER SHADES
67 DEDUCTION CHARTS
75 FABRIC SELECTOR

Front Cover: U.S. Citizenship and Immigration Services, Irving, TX
Architect: 4240 Architecture
Product: RB 500 Motorized Roller Shades

Above: U.S. Green Building Council, Del Mar, CA
Architect: Thomas Turner Design Build Inc.
Product: RB 500 Manual Roller Shades

SIZE STANDARDS

Size maximums (width x height) and tube sizes.

Manual Roller Shades

	Fabric Weight: Up to 6 oz./yd.^{2}	6 – 12.875 oz./yd.^{2}	Over 12.875 oz./yd.^{2}
STANDARD			
Maximum Size	80" x 120"*/98" x 156"**	80" x 120"*/98" x 90"**	60" x 120"*
Tube Sizes Available	1.25", 1.5", 2"	1.25", 1.5", 2"	1.25", 1.5", 2"
HEAVY DUTY			
Maximum Size	192" x 240"	170" x 240"	156" x 240"
Tube Sizes Available	2", 2.5"	2", 2.5"	2", 2.5"
DUAL HEAVY DUTY			
Maximum Size	156" x 240"	156" x 240"	156" x 240"
Tube Size Available	2.5"	2.5"	2.5"

*1:1 clutch **1.75:1 clutch

Motorized Roller Shades

Application:	Single Shade	Coupled Shades	Dual Shades	Dual Coupled
WHISPER™ MOTOR HDC 100S & 100RQ				
Maximum Size	156" x 240"	—	156" x 240"	—
Tube Size Available	2.5"	—	2.5"	—
WHISPER MOTOR HDC 200S & 200RQ				
Maximum Size	192" x 240"	240" x 240"	—	192" x 240"
Tube Size Available	2.5"	2.5"	—	2.5"
ST50 STANDARD & ST50 RTS				
Maximum Size	156" x 240"	—	156" x 240"	—
Tube Size Available	2.5"	—	2.5"	—
LS40				
Maximum Size	72" x 144"	—	—	—
Tube Size Available	2"	—	—	—
LT525 STANDARD & LT525 RTS				
Maximum Size	192" x 240"	240" X 240"	—	192" x 240"
Tube Size Available	2.5"	2.5"	—	2.5"

Maximum single panel widths vary with fabric weight: up to 6 oz./yd² = 192"; 6-12.875 oz./yd² = 170"; over 12.875"/yd² = 156".
Maximum sizes also include banded and crank applications.
Maximum roll-up diameter for dual shades is 3.5".
If coupled shades are ordered with fascia, individual fascia are required for widths over 192".

Contact Hunter Douglas Contract Customer Service at 800.727.8953 for maximum dimensions beyond our size standards and for all specialty applications.
Refer to our website for minimum size standards and light gap dimensions.

APPLICATIONS

Available applications by shade and motor type.

Manual and Motorized Roller Shades

APPLICATIONS	MANUAL STANDARD	MANUAL HEAVY DUTY	MOTORIZED HDC 100S & 100RQ	MOTORIZED HDC 200S & 200RQ	MOTORIZED ST50 STD & RTS	MOTORIZED LS40	MOTORIZED LT525 STD & RTS
Clutch	●	●					
Clutch Banded	●	●					
Clutch with Fascia	●	●					
Clutch with Blockout System	●	●					
Clutch with Extruded Pocket	●	●					
Clutch Coupled		●					
Clutch Coupled with Fascia		●					
Clutch Coupled with Blockout System		●					
Crank	●	●					
Crank Banded	●	●					
Crank with Fascia	●	●					
Crank with Blockout System	●	●					
Crank with Extruded Pocket	●	●					
Crank Coupled	●	●					
Crank Coupled with Fascia	●	●					
Crank Coupled with Blockout System	●	●					
Motorized			●	●	●	●	●
Motorized Banded			●	●	●	●	●
Motorized with Fascia			●	●	●	●	●
Motorized with Blockout System			●	●	●	●	●
Motorized with Extruded Pocket			●	●	●	●	●
Motorized Coupled				●			●
Motorized Coupled with Fascia				●			●
Motorized Coupled with Blockout System				●			●
Dual		●	●		●		
Dual with Fascia		●	●		●		
Dual with Blockout System		●	●		●		
Dual Coupled		●		●			●
Dual Coupled with Fascia		●		●			●
Dual Coupled with Blockout System		●		●			●
Cable Guides	●	●	●	●	●	●	●

HARDWARE COLORS

Color codes for component part numbers ending in “xxxx”.

Manual and Motorized Roller Shades

COMPONENT / COLOR NUMBER AND NAME	0155 WHITE	0199 WHITE	0864 BRONZE	0952 GRAY	1858 BLACK	4459 MAGNOLIA	7052 ALUMINUM	7060 PEARL CHROME
Standard Installation Bracket		●			●		●	
Standard Decorator Bracket		●			●			●
Standard and Decorator Bracket Cover	●			●	●			
Heavy Duty Installation Bracket		●			●		●	
Heavy Duty Bracket Cover	●			●	●		●	
Motor Bracket		●			●		●	
Motor Bracket Cover	●			●	●		●	
Fascia		●	●		●	●	●*	
Fascia Bracket		●			●	●	●	
Fascia Bracket Cover	●			●	●	●		
Fascia Bracket – Blockout		●			●		●	
Fascia Chain Outlet Set	●			●	●			
Side Channel and Double Channel		●	●		●	●	●	
Channel End Cap	●			●	●	●		
Standard Clutch	●			●	●			
Heavy Duty Clutch	●			●	●			
Crank Drive Shaft	●			●	●			
Roller Tube		●						
Tube Plugs	●			●	●			

*Anodized Aluminum

For Pocket and Pocket End Plate information, refer to the specification drawings on pages 13, 26, 33, 49 and 56.

0155/0199 WHITE

0864 BRONZE

0952 GRAY

1858 BLACK

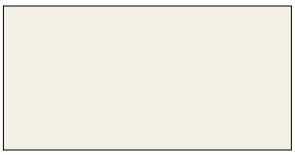

4459 MAGNOLIA

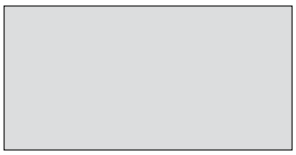

7052 ALUMINUM

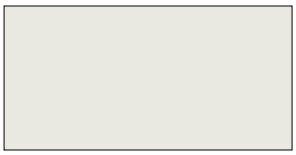

7060 PEARL CHROME

Manual Roller Shades

STANDARD CLUTCH SYSTEM

5-11 SERIES – CHAIN OPERATION

Also Available Banded

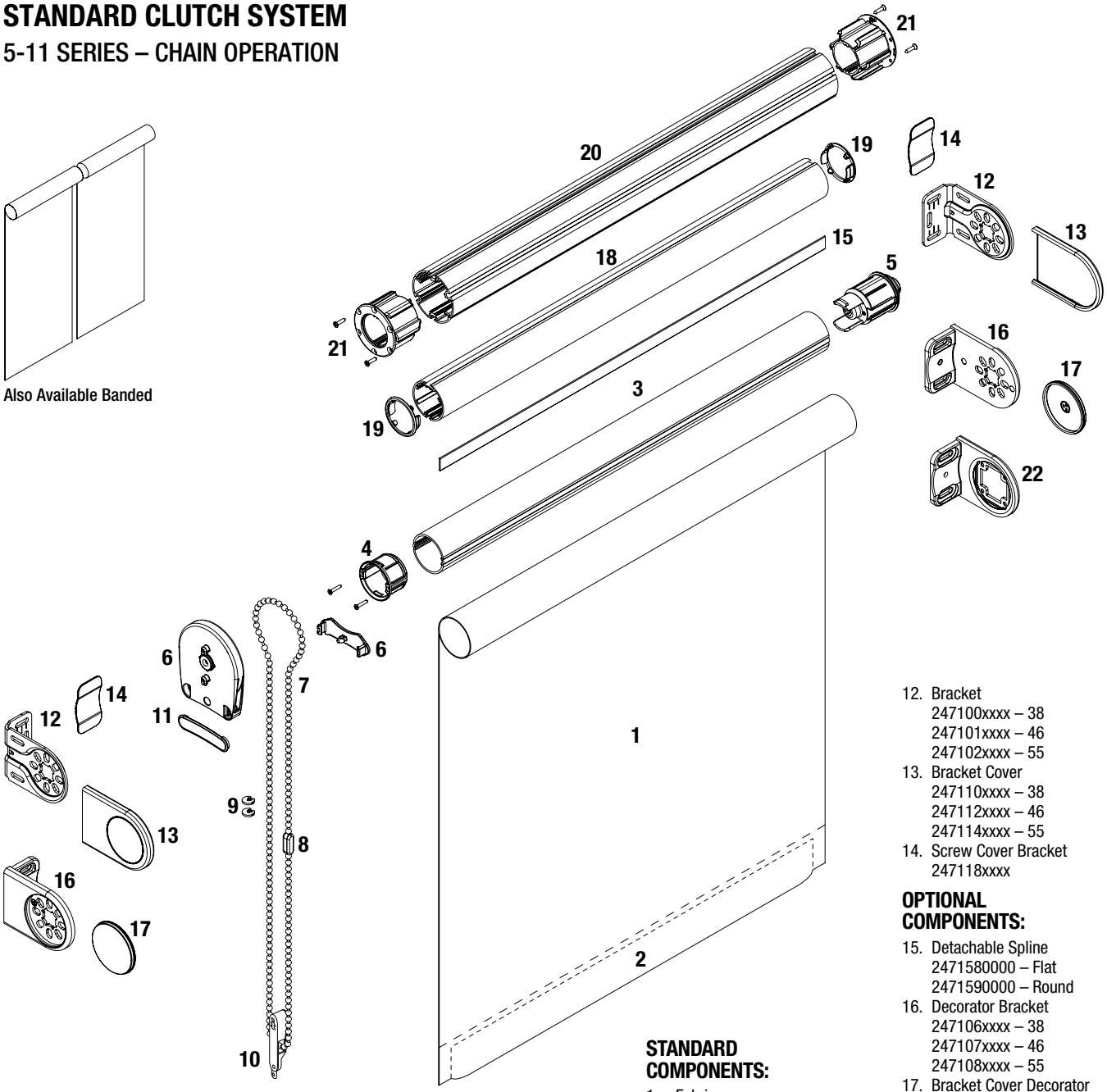

STANDARD COMPONENTS:

1. Fabric
2. Sealed Hembar
3. Tube 1.125" Tape 5m
   247000xxxx
4. Tube Plug Control Set 1.125"
   247122xxxx
5. Tube Bearing Plug 1.125"
   247120xxxx
6. Control Set 1.125" Chain
   247124xxxx – 1.75:1
   247125xxxx – 1:1x2
7. Chain .175" Stainless Steel
   2474180025
8. Chain Connector
   2474180026
9. Bead Chain Stop
   2474180027
10. Clear Plastic Chain Tensioner
    RC445401
11. Cover Control Set 1.125"
    247127xxxx
12. Bracket
    247100xxxx – 38
    247101xxxx – 46
    247102xxxx – 55
13. Bracket Cover
    247110xxxx – 38
    247112xxxx – 46
    247114xxxx – 55
14. Screw Cover Bracket
    247118xxxx

OPTIONAL COMPONENTS:

15. Detachable Spline
    2471580000 – Flat
    2471590000 – Round
16. Decorator Bracket
    247106xxxx – 38
    247107xxxx – 46
    247108xxxx – 55
17. Bracket Cover Decorator
    247116xxxx
18. Tube 1.5"
    247001xxxx – Tape 5m
    247002xxxx – Spline 5m
19. Tube Adapter 1.5"
    247121xxxx
20. Tube 2.0"
    247060xxxx – Tape 5m
    247061xxxx – Spline 5m
21. Tube Adapter 2.0"
    247128xxxx
22. Leveling Bracket Decorator (also available as Standard Bracket)
    247190xxxx – 38
    247191xxxx – 46
    247192xxxx – 55

xxxx = 4 digit color code. See Color Chart on page 4 for list of color codes.

STANDARD BRACKET MOUNTING LOCATIONS

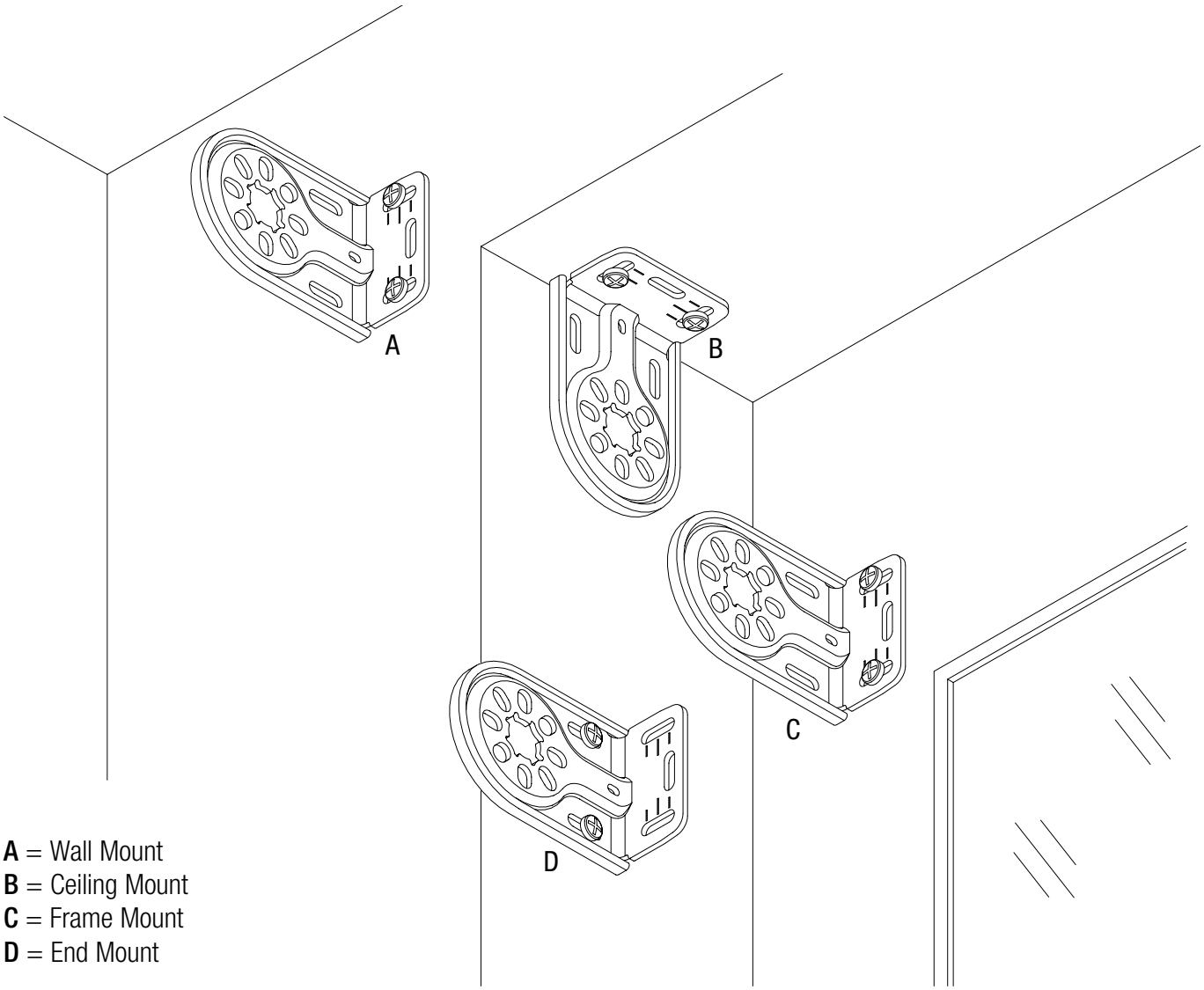

A = Wall Mount
B = Ceiling Mount
C = Frame Mount
D = End Mount

STANDARD BRACKET DIMENSIONS

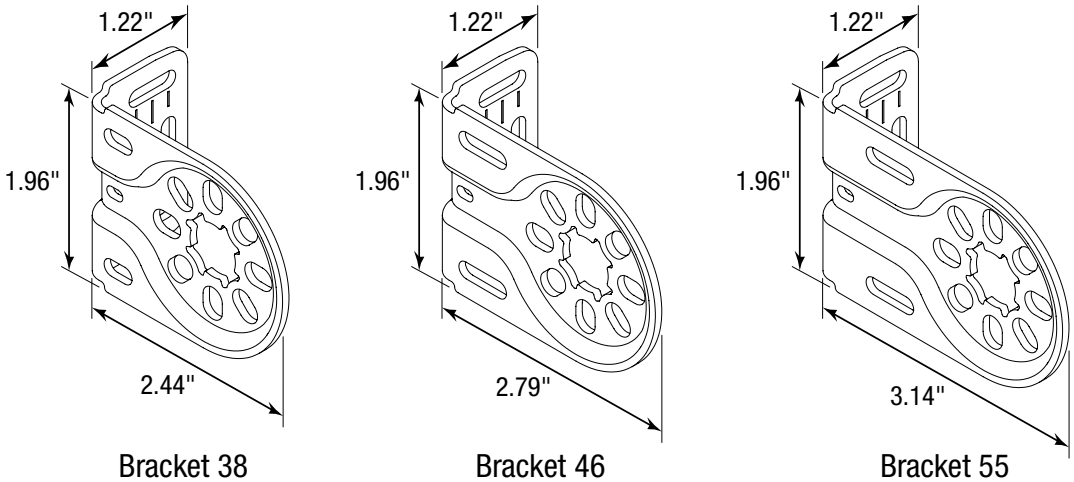

Bracket 38 Bracket 46 Bracket 55

BRACKET 38 SHADE MOUNTING

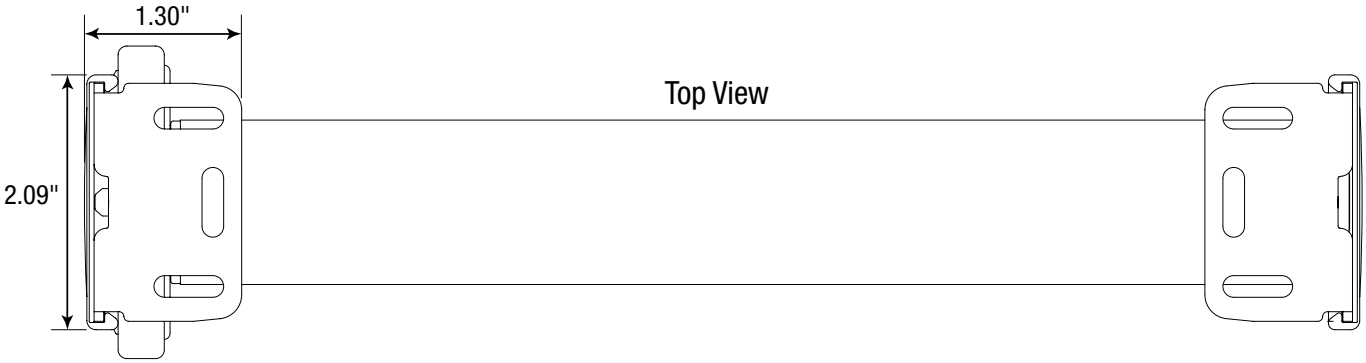

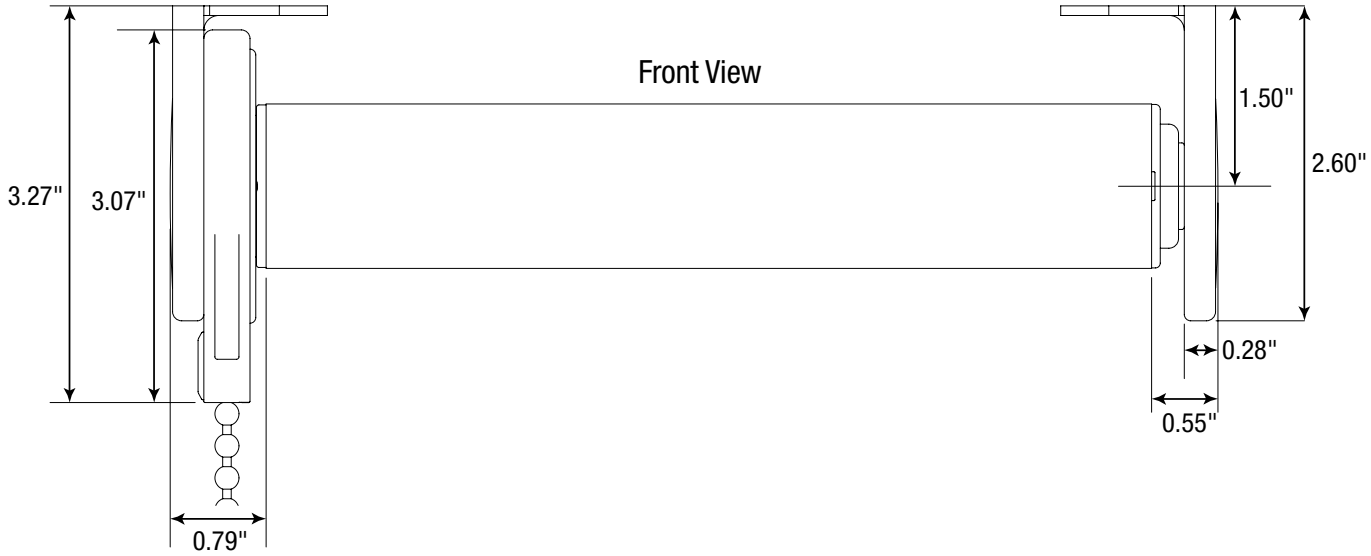

Side View

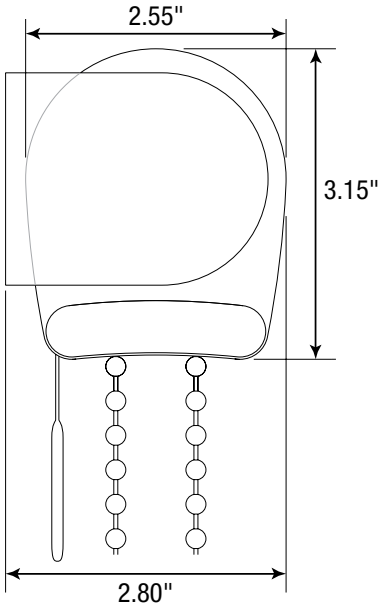

BRACKET 46 SHADE MOUNTING

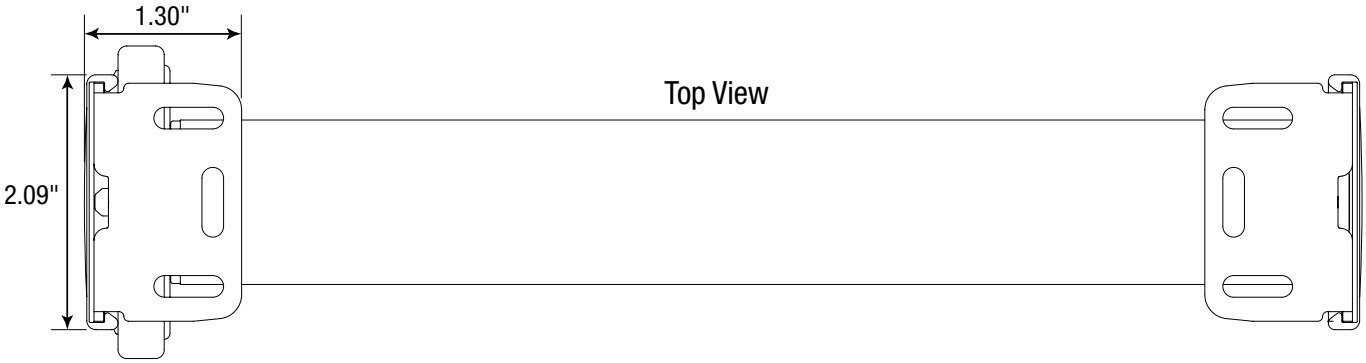

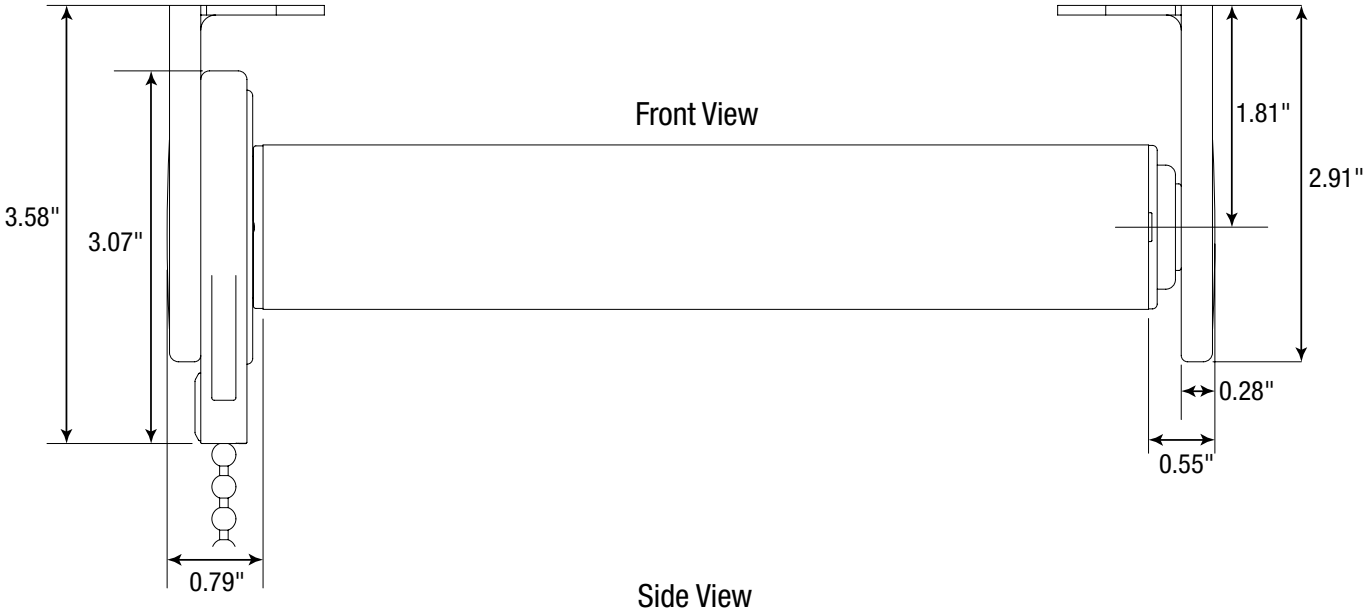

Side View

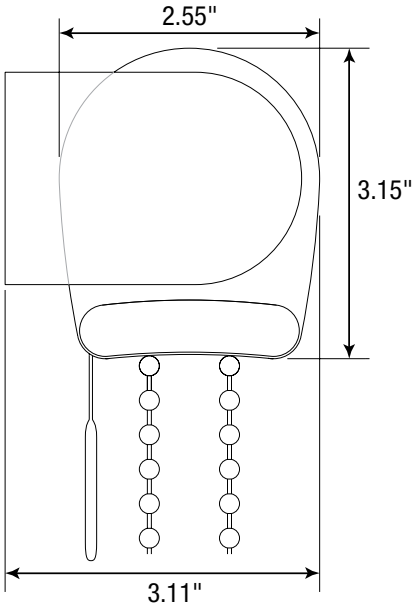

BRACKET 55 SHADE MOUNTING

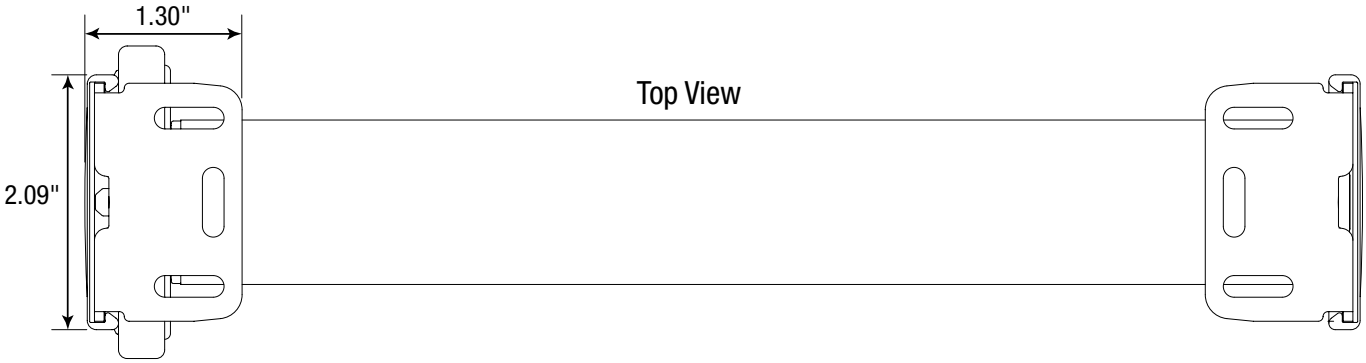

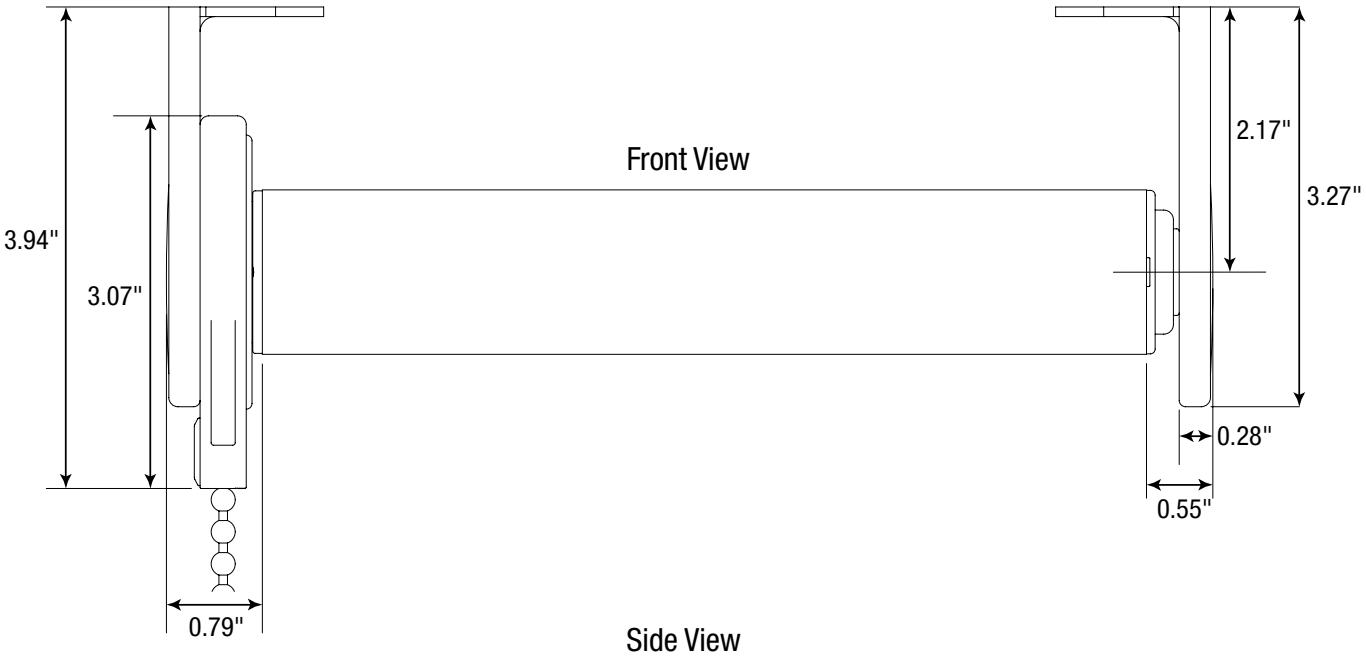

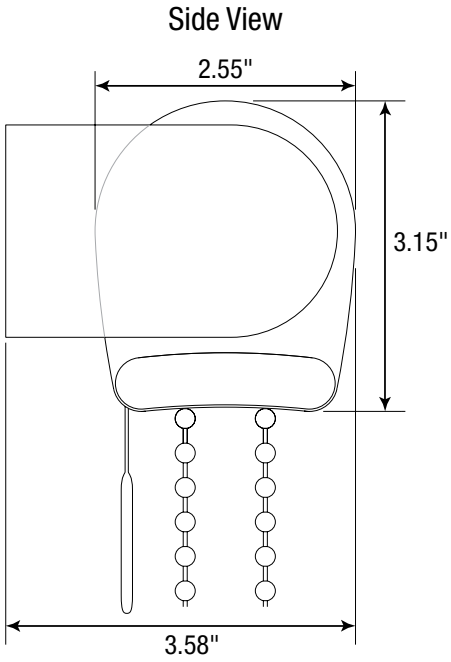

STANDARD CLUTCH SYSTEM WITH FASCIA

5-31 SERIES – CHAIN OPERATION

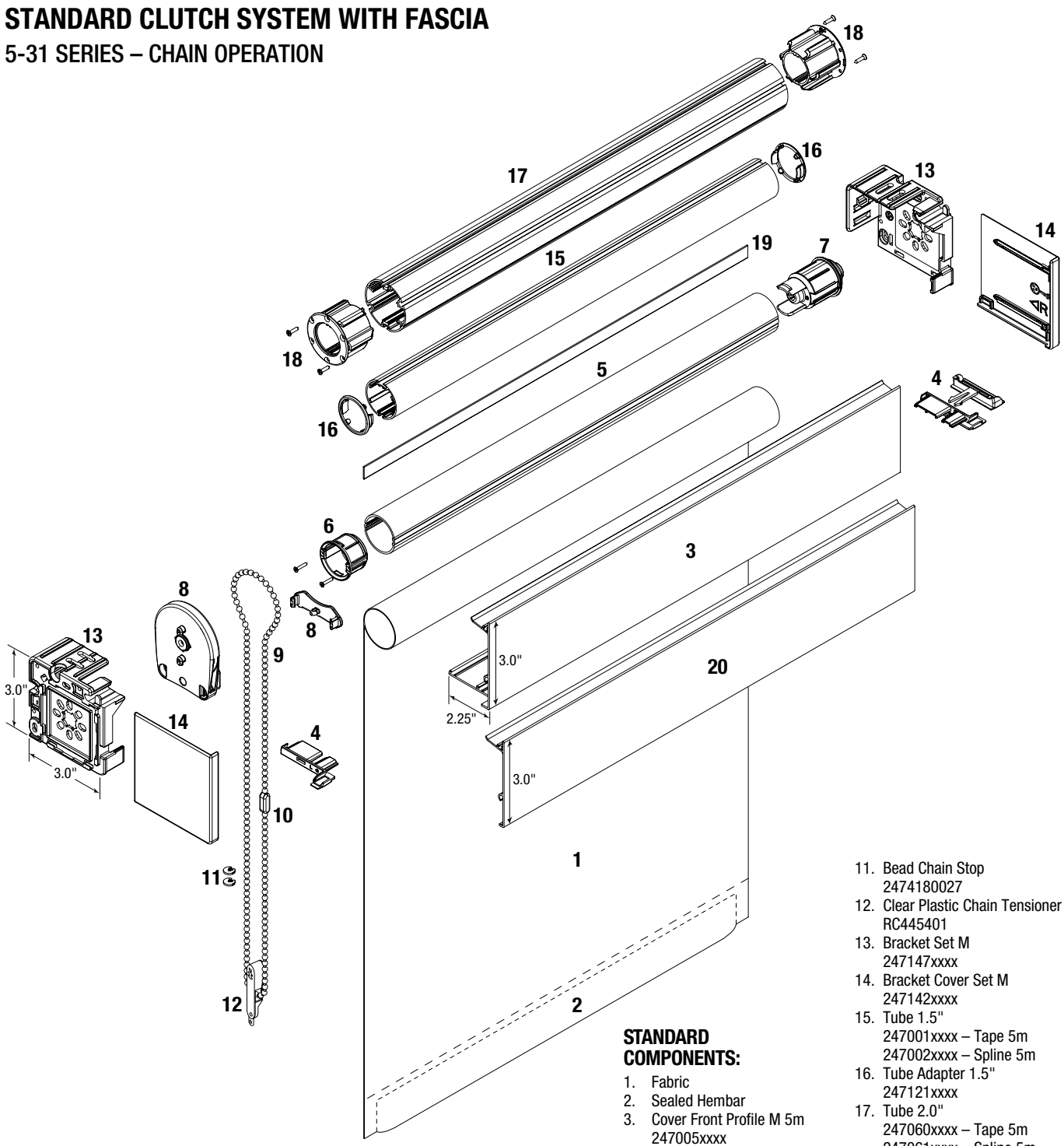

STANDARD COMPONENTS:

1. Fabric
2. Sealed Hembar
3. Cover Front Profile M 5m
   247005xxxx
4. Chain Outlet Set M
   247146xxxx
5. Tube 1.125" Tape 5m
   247000xxxx
6. Tube Plug Control Set 1.125"
   247122xxxx
7. Tube Bearing Plug 1.125"
   247120xxxx
8. Control Set 1.125" Chain
   247124xxxx – 1.75:1
   247125xxxx – 1:1x2
9. Chain .175" Stainless Steel
   2474180025
10. Chain Connector
    2474180026
11. Bead Chain Stop
    2474180027
12. Clear Plastic Chain Tensioner
    RC445401
13. Bracket Set M
    247147xxxx
14. Bracket Cover Set M
    247142xxxx
15. Tube 1.5"
    247001xxxx – Tape 5m
    247002xxxx – Spline 5m
16. Tube Adapter 1.5"
    247121xxxx
17. Tube 2.0"
    247060xxxx – Tape 5m
    247061xxxx – Spline 5m
18. Tube Adapter 2.0"
    247128xxxx

OPTIONAL COMPONENTS:

19. Detachable Spline
    2471580000 – Flat
    2471590000 – Round
20. Reverse Roll Cover Profile M 5m
    247008xxxx

xxxx = 4 digit color code. See Color Chart on page 4 for list of color codes.

Note: End Mount Installations will not receive a Bracket Cover Set and must be specified when ordering.

STANDARD CLUTCH WITH BLOCKOUT SYSTEM

5-51 SERIES – CHAIN OPERATION

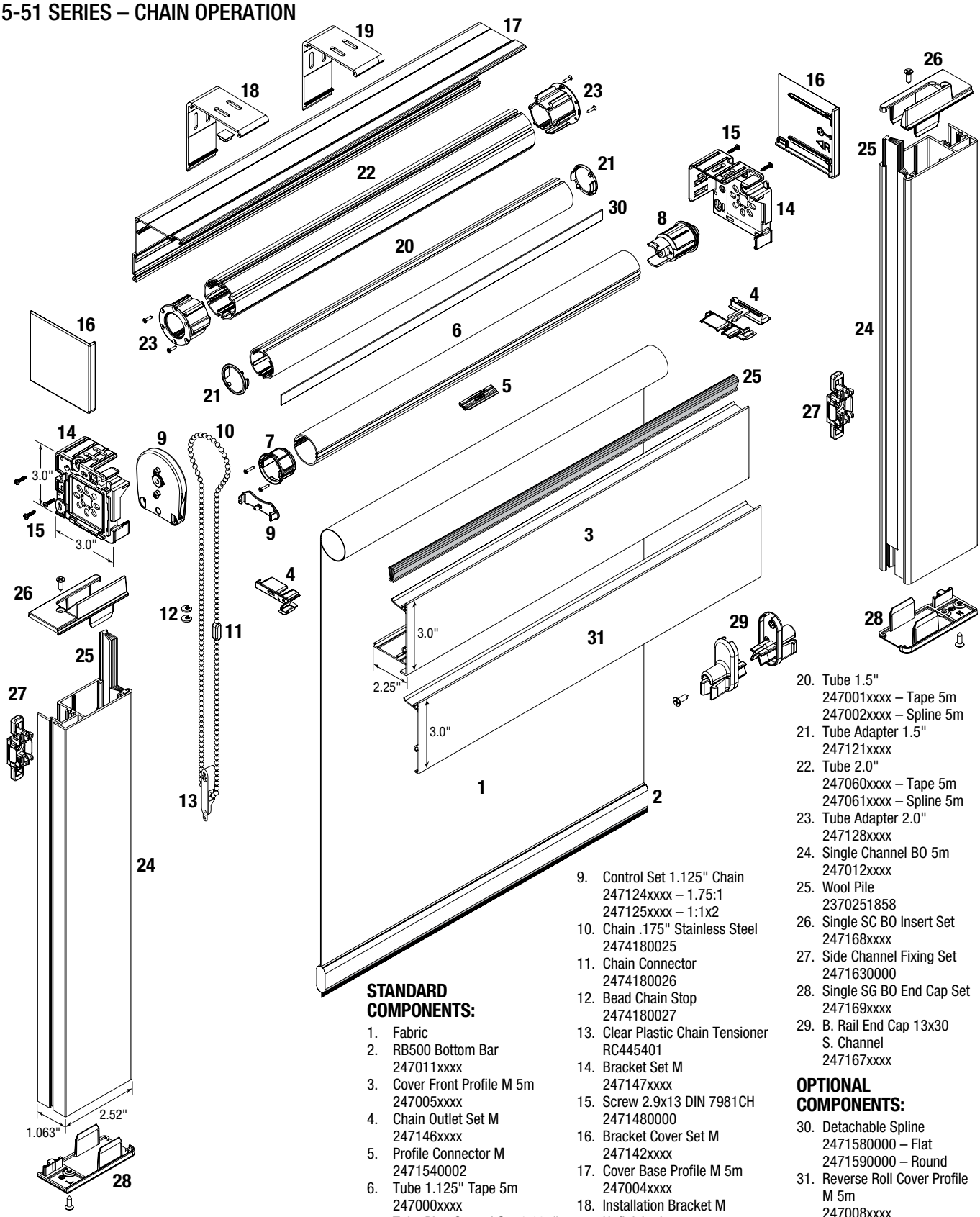

Note: End Mount Installations will not receive a Bracket Cover Set and must be specified when ordering.

STANDARD COMPONENTS:

1. Fabric
2. RB500 Bottom Bar
   247011xxxx
3. Cover Front Profile M 5m
   247005xxxx
4. Chain Outlet Set M
   247146xxxx
5. Profile Connector M
   2471540002
6. Tube 1.125" Tape 5m
   247000xxxx
7. Tube Plug Control Set 1.125"
   247122xxxx
8. Tube Bearing Plug 1.125"
   247120xxx
9. Control Set 1.125" Chain
   247124xxxx – 1.75:1
   247125xxxx – 1:1x2
10. Chain .175" Stainless Steel
    2474180025
11. Chain Connector
    2474180026
12. Bead Chain Stop
    2474180027
13. Clear Plastic Chain Tensioner
    RC445401
14. Bracket Set M
    247147xxxx
15. Screw 2.9x13 DIN 7981CH
    2471480000
16. Bracket Cover Set M
    247142xxxx
17. Cover Base Profile M 5m
    247004xxxx
18. Installation Bracket M
    Unfinished
    2471760000
19. Installation Bracket M
    247140xxxx
20. Tube 1.5"
    247001xxxx – Tape 5m
    247002xxxx – Spline 5m
21. Tube Adapter 1.5"
    247121xxxx
22. Tube 2.0"
    247060xxxx – Tape 5m
    247061xxxx – Spline 5m
23. Tube Adapter 2.0"
    247128xxxx
24. Single Channel BO 5m
    247012xxxx
25. Wool Pile
    2370251858
26. Single SC BO Insert Set
    247168xxxx
27. Side Channel Fixing Set
    2471630000
28. Single SG BO End Cap Set
    247169xxxx
29. B. Rail End Cap 13x30
    S. Channel
    247167xxxx

OPTIONAL COMPONENTS:

30. Detachable Spline
    2471580000 – Flat
    2471590000 – Round
31. Reverse Roll Cover Profile
    M 5m
    247008xxxx

xxxx = 4 digit color code. See Color Chart on page 4 for list of color codes.

STANDARD CLUTCH SYSTEM WITH EXTRUDED POCKET

5-11 SERIES – CHAIN OPERATION

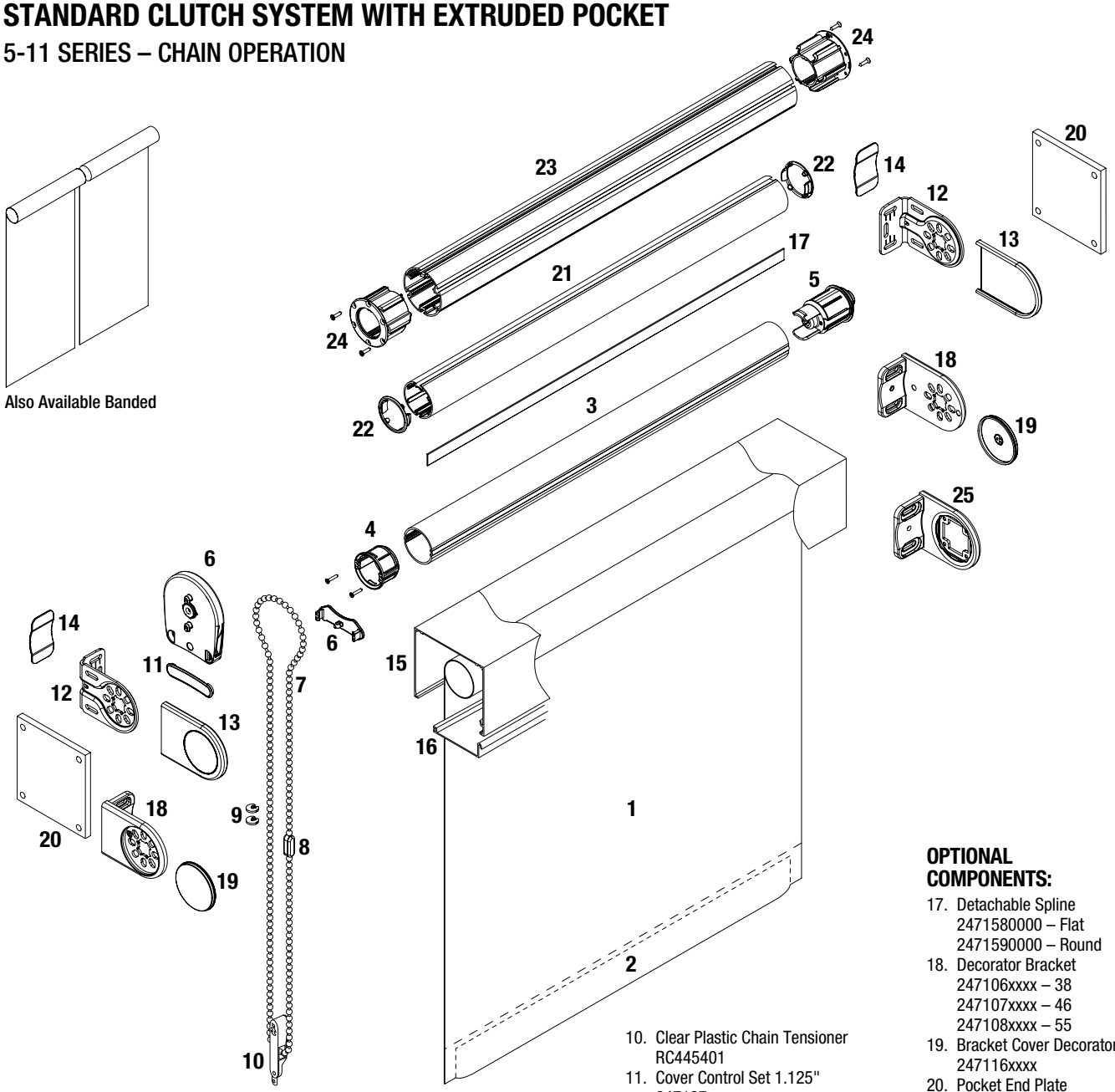

Also Available Banded

POCKET PROFILES:

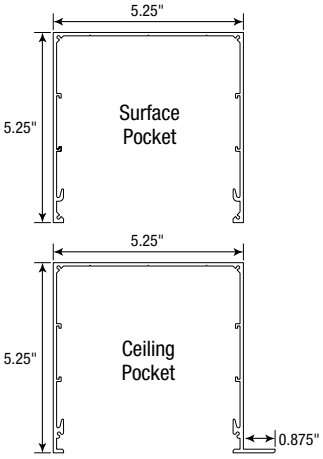

STANDARD COMPONENTS:

1. Fabric
2. Sealed Hembar
3. Tube 1.125" Tape 5m
   247000xxxx
4. Tube Plug Control Set 1.125"
   247122xxxx
5. Tube Bearing Plug 1.125"
   247120xxxx
6. Control Set 1.125"
   247124xxxx – 1.75:1
   247125xxxx – 1:1x2
7. Chain .175" Stainless Steel
   2474180025
8. Chain Connector
   2474180026
9. Bead Chain Stop
   2474180027
10. Clear Plastic Chain Tensioner
    RC445401
11. Cover Control Set 1.125"
    247127xxxx
12. Bracket
    247100xxxx – 38
    247101xxxx – 46
    247102xxxx – 55
13. Bracket Cover
    247110xxxx – 38
    247112xxxx – 46
    247114xxxx – 55
14. Screw Cover Bracket
    247118xxxx
15. 5.25" Extruded Pocket
    RC502000 – Ceiling Pocket Anodized
    RC502675 – Ceiling Pocket White
    RC503000 – Surface Pocket Anodized
    RC503675 – Surface Pocket White
16. 2" Pocket Bottom Closure
    RC500000 – Anodized
    RC500675 – White
    3" Pocket Bottom Closure
    RC501000 – Anodized
    RC501675 – White

OPTIONAL COMPONENTS:

17. Detachable Spline
    2471580000 – Flat
    2471590000 – Round
18. Decorator Bracket
    247106xxxx – 38
    247107xxxx – 46
    247108xxxx – 55
19. Bracket Cover Decorator
    247116xxxx
20. Pocket End Plate
    RC506675 – White
    RC506000 – Anodized
21. Tube 1.5"
    247001xxxx – Tape 5m
    247002xxxx – Spline 5m
22. Tube Adapter 1.5"
    247121xxxx
23. Tube 2.0"
    247060xxxx – Tape 5m
    247061xxxx – Spline 5m
24. Tube Adapter 2.0"
    247128xxxx
25. Leveling Bracket Decorator (also available as Standard Bracket)
    247190xxxx – 38
    247191xxxx – 46
    247192xxxx – 55

xxxx = 4 digit color code. See Color Chart on page 4 for list of color codes.

STANDARD CRANK OPERATED

5-15 SERIES – CRANK OPERATION

Also Available Banded

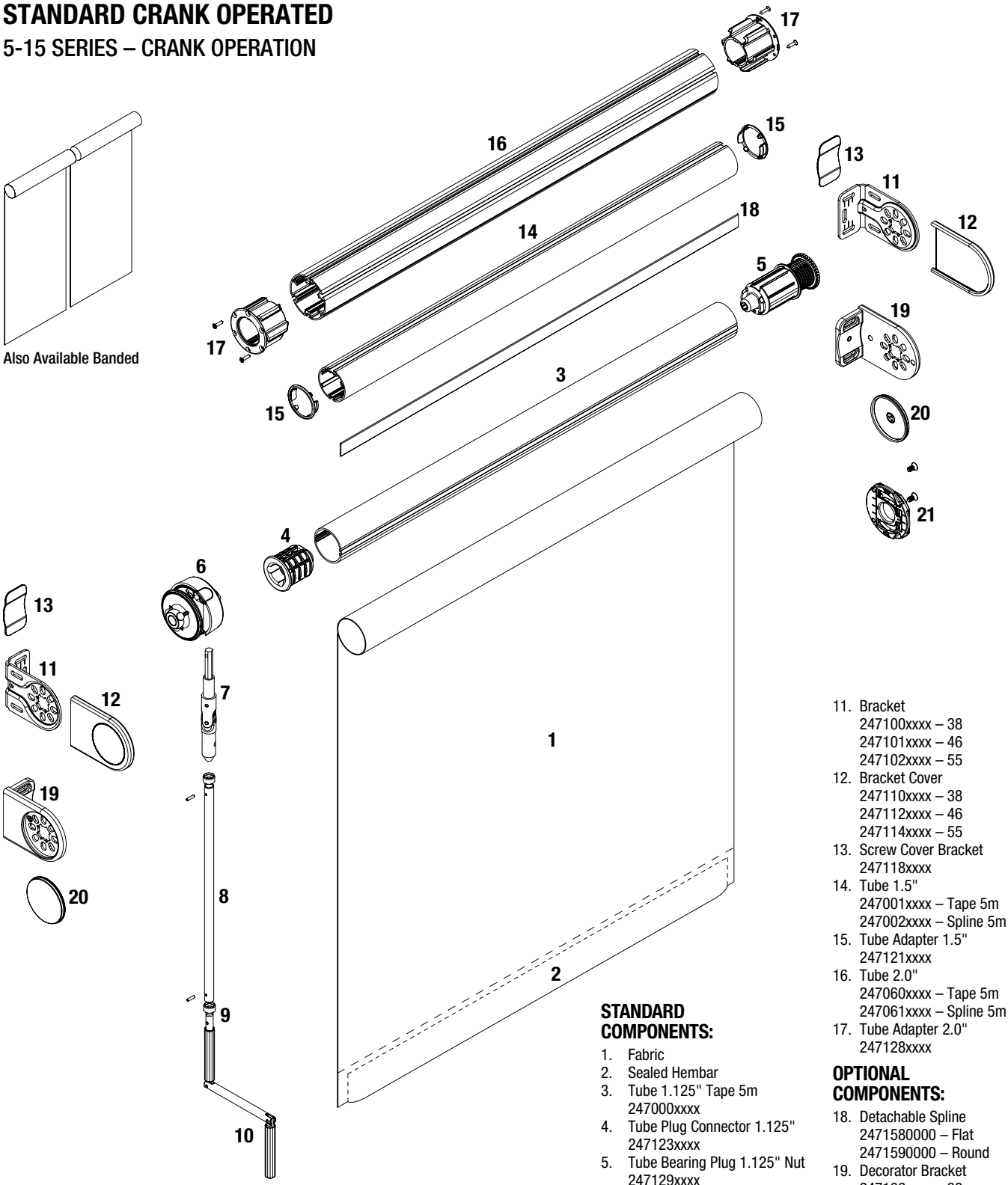

STANDARD COMPONENTS:

1. Fabric
2. Sealed Hembar
3. Tube 1.125" Tape 5m
   247000xxxx
4. Tube Plug Connector 1.125"
   247123xxxx
5. Tube Bearing Plug 1.125" Nut
   247129xxxx
6. Crank Drive M
   247156xxxx
7. Crank Joint M
   2471800000
8. Tube 0.59"
   2971807010
9. Crank Rod Collar + pin OB
   1801130000
10. Crank 0.55" OB
    1801010000
11. Bracket
    247100xxxx – 38
    247101xxxx – 46
    247102xxxx – 55
12. Bracket Cover
    247110xxxx – 38
    247112xxxx – 46
    247114xxxx – 55
13. Screw Cover Bracket
    247118xxxx
14. Tube 1.5"
    247001xxxx – Tape 5m
    247002xxxx – Spline 5m
15. Tube Adapter 1.5"
    247121xxxx
16. Tube 2.0"
    247060xxxx – Tape 5m
    247061xxxx – Spline 5m
17. Tube Adapter 2.0"
    247128xxxx

OPTIONAL COMPONENTS:

18. Detachable Spline
    2471580000 – Flat
    2471590000 – Round
19. Decorator Bracket
    247106xxxx – 38
    247107xxxx – 46
    247108xxxx – 55
20. Bracket Cover Decorator
    247116xxxx
21. Integrated Leveler 31
    2471967060

xxxx = 4 digit color code. See Color Chart on page 4 for list of color codes.

STANDARD CRANK OPERATED WITH FASCIA

5-35 SERIES – CRANK OPERATION

Also Available Banded

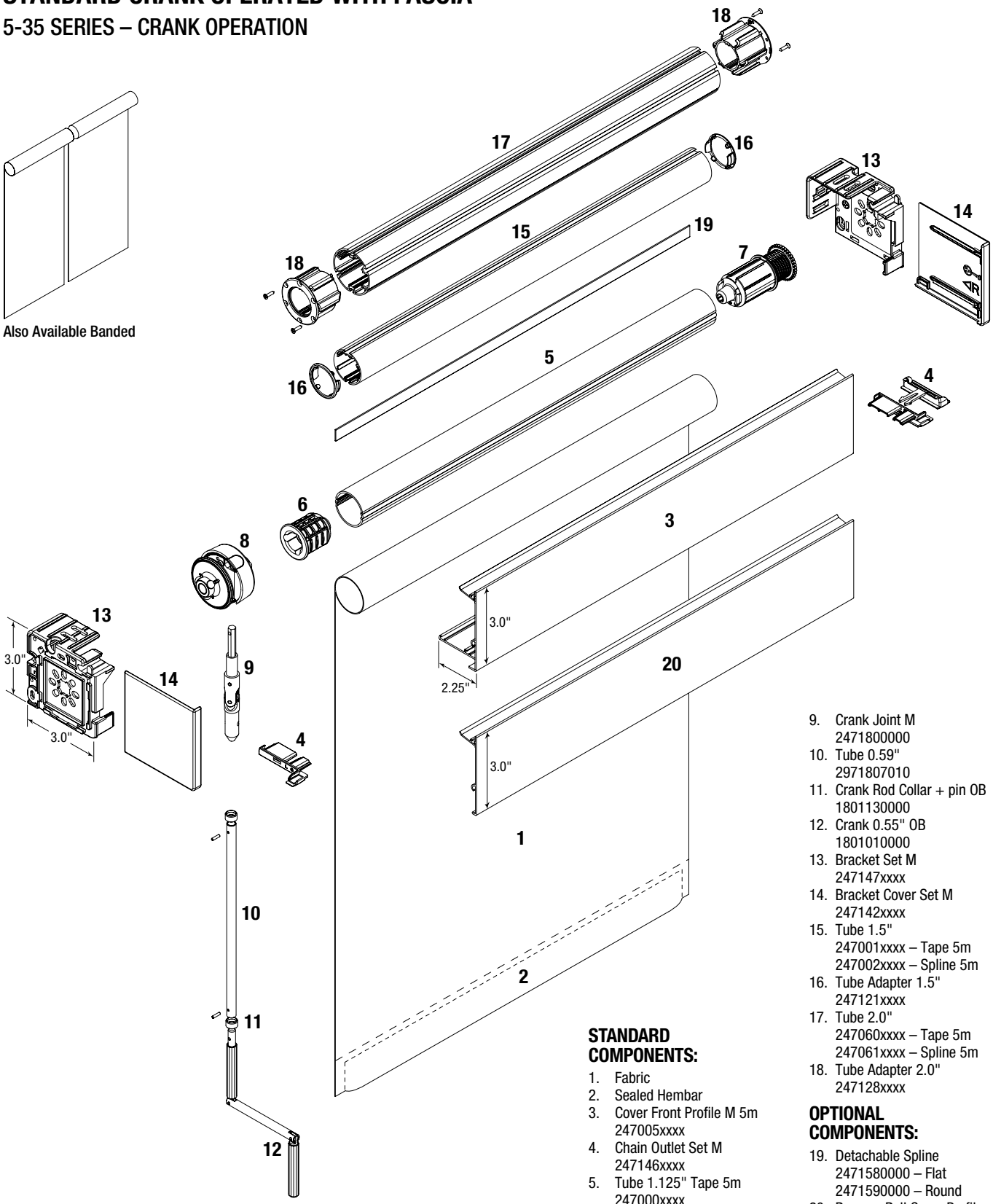

Note: End Mount Installations will not receive a Bracket Cover Set and must be specified when ordering.

STANDARD COMPONENTS:

1. Fabric
2. Sealed Hembar
3. Cover Front Profile M 5m
   247005xxxx
4. Chain Outlet Set M
   247146xxxx
5. Tube 1.125" Tape 5m
   247000xxxx
6. Tube Plug Connector 1.125"
   247123xxxx
7. Tube Bearing Plug 1.125" Nut
   247129xxxx
8. Crank Drive M
   247156xxxx
9. Crank Joint M
   2471800000
10. Tube 0.59"
    2971807010
11. Crank Rod Collar + pin OB
    1801130000
12. Crank 0.55" OB
    1801010000
13. Bracket Set M
    247147xxxx
14. Bracket Cover Set M
    247142xxxx
15. Tube 1.5"
    247001xxxx – Tape 5m
    247002xxxx – Spline 5m
16. Tube Adapter 1.5"
    247121xxxx
17. Tube 2.0"
    247060xxxx – Tape 5m
    247061xxxx – Spline 5m
18. Tube Adapter 2.0"
    247128xxxx

OPTIONAL COMPONENTS:

19. Detachable Spline
    2471580000 – Flat
    2471590000 – Round
20. Reverse Roll Cover Profile M 5m
    247008xxxx

xxxx = 4 digit color code. See Color Chart on page 4 for list of color codes.

STANDARD CRANK OPERATED WITH BLOCKOUT SYSTEM

5-55 SERIES – CRANK OPERATION

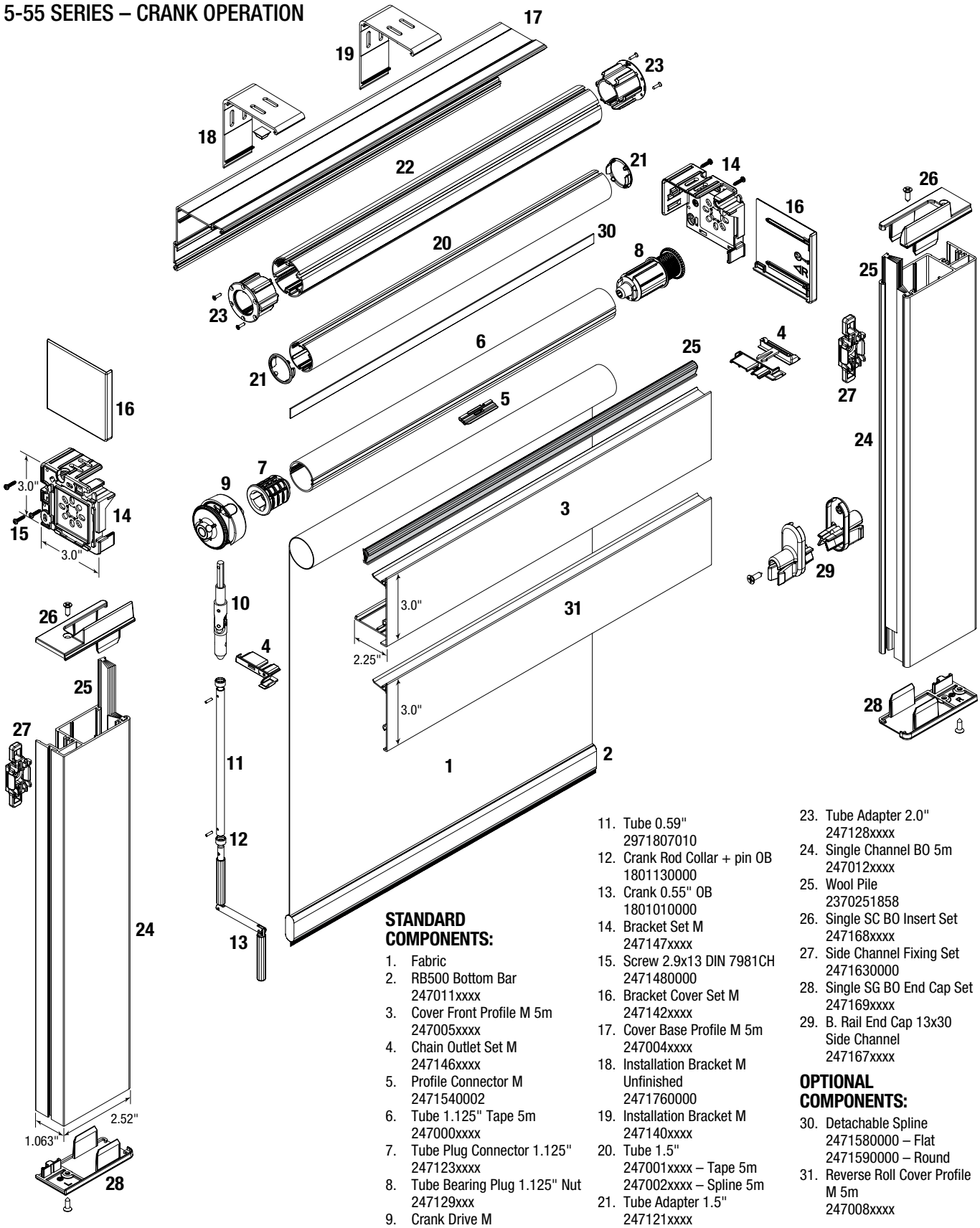

Note: End Mount Installations will not receive a Bracket Cover Set and must be specified when ordering.

STANDARD COMPONENTS:

1. Fabric
2. RB500 Bottom Bar
   247011xxxx
3. Cover Front Profile M 5m
   247005xxxx
4. Chain Outlet Set M
   247146xxxx
5. Profile Connector M
   2471540002
6. Tube 1.125" Tape 5m
   247000xxxx
7. Tube Plug Connector 1.125"
   247123xxxx
8. Tube Bearing Plug 1.125" Nut
   247129xxx
9. Crank Drive M
   247156xxxx
10. Crank Joint M
    2471800000
11. Tube 0.59"
    2971807010
12. Crank Rod Collar + pin OB
    1801130000
13. Crank 0.55" OB
    1801010000
14. Bracket Set M
    247147xxxx
15. Screw 2.9x13 DIN 7981CH
    2471480000
16. Bracket Cover Set M
    247142xxxx
17. Cover Base Profile M 5m
    247004xxxx
18. Installation Bracket M
    Unfinished
    2471760000
19. Installation Bracket M
    247140xxxx
20. Tube 1.5"
    247001xxxx – Tape 5m
    247002xxxx – Spline 5m
21. Tube Adapter 1.5"
    247121xxxx
22. Tube 2.0"
    247060xxxx – Tape 5m
    247061xxxx – Spline 5m
23. Tube Adapter 2.0"
    247128xxxx
24. Single Channel BO 5m
    247012xxxx
25. Wool Pile
    2370251858
26. Single SC BO Insert Set
    247168xxxx
27. Side Channel Fixing Set
    2471630000
28. Single SG BO End Cap Set
    247169xxxx
29. B. Rail End Cap 13x30
    Side Channel
    247167xxxx

OPTIONAL COMPONENTS:

30. Detachable Spline
    2471580000 – Flat
    2471590000 – Round
31. Reverse Roll Cover Profile M 5m
    247008xxxx

xxxx = 4 digit color code. See Color Chart on page 4 for list of color codes.

STANDARD CRANK OPERATED COUPLED SHADE

5-19 SERIES – COUPLED

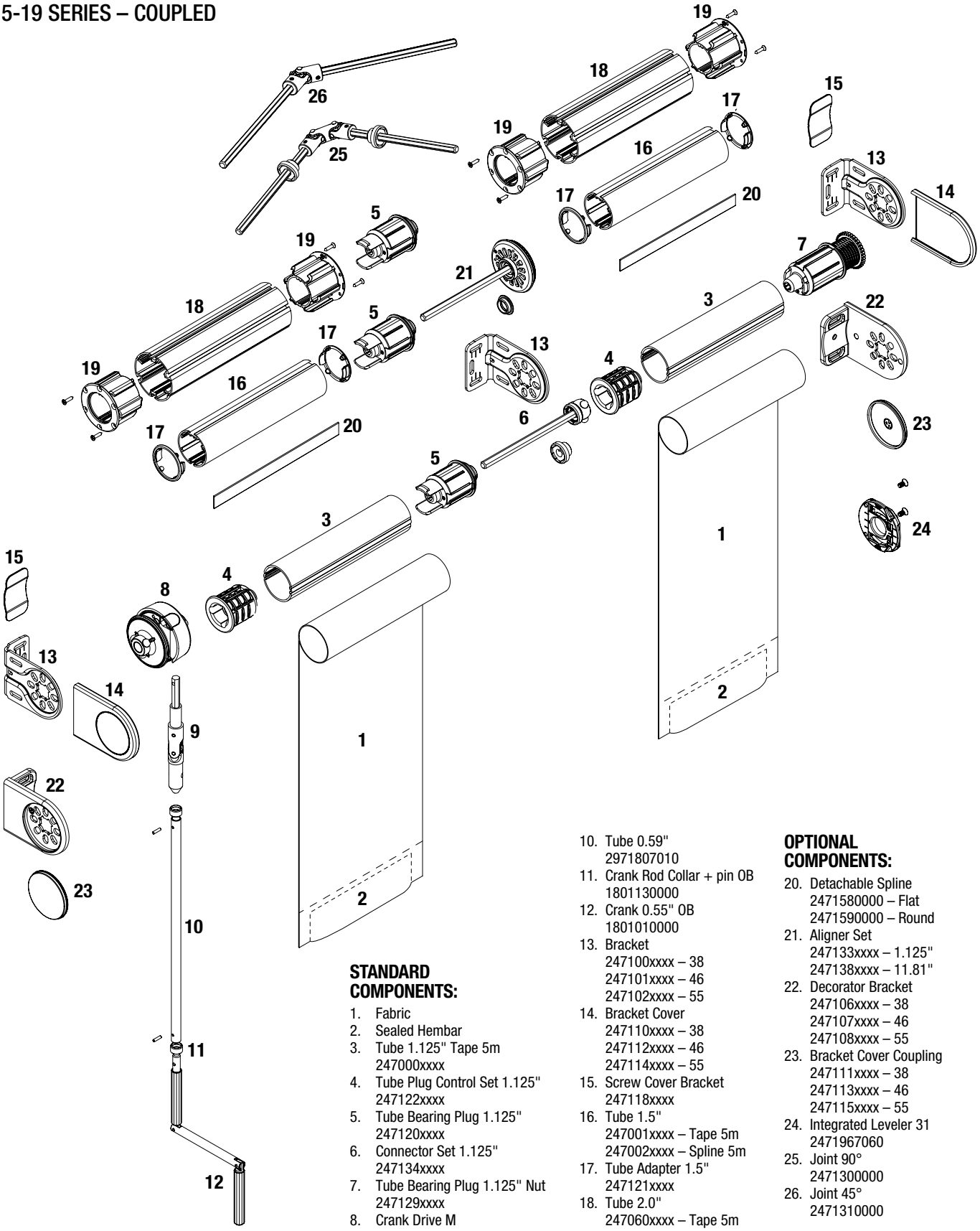

STANDARD COMPONENTS:

1. Fabric
2. Sealed Hembar
3. Tube 1.125" Tape 5m
   247000xxxx
4. Tube Plug Control Set 1.125"
   247122xxxx
5. Tube Bearing Plug 1.125"
   247120xxxx
6. Connector Set 1.125"
   247134xxxx
7. Tube Bearing Plug 1.125" Nut
   247129xxxx
8. Crank Drive M
   247156xxxx
9. Crank Joint M
   2471800000
10. Tube 0.59"
    2971807010
11. Crank Rod Collar + pin OB
    1801130000
12. Crank 0.55" OB
    1801010000
13. Bracket
    247100xxxx – 38
    247101xxxx – 46
    247102xxxx – 55
14. Bracket Cover
    247110xxxx – 38
    247112xxxx – 46
    247114xxxx – 55
15. Screw Cover Bracket
    247118xxxx
16. Tube 1.5"
    247001xxxx – Tape 5m
    247002xxxx – Spline 5m
17. Tube Adapter 1.5"
    247121xxxx
18. Tube 2.0"
    247060xxxx – Tape 5m
    247061xxxx – Spline 5m
19. Tube Adapter 2.0"
    247128xxxx

OPTIONAL COMPONENTS:

20. Detachable Spline
    2471580000 – Flat
    2471590000 – Round
21. Aligner Set
    247133xxxx – 1.125"
    247138xxxx – 11.81"
22. Decorator Bracket
    247106xxxx – 38
    247107xxxx – 46
    247108xxxx – 55
23. Bracket Cover Coupling
    247111xxxx – 38
    247113xxxx – 46
    247115xxxx – 55
24. Integrated Leveler 31
    2471967060
25. Joint 90°
    2471300000
26. Joint 45°
    2471310000

xxxx = 4 digit color code. See Color Chart on page 4 for list of color codes.

STANDARD CRANK OPERATED COUPLED SHADE WITH FASCIA

5-39 SERIES – COUPLED

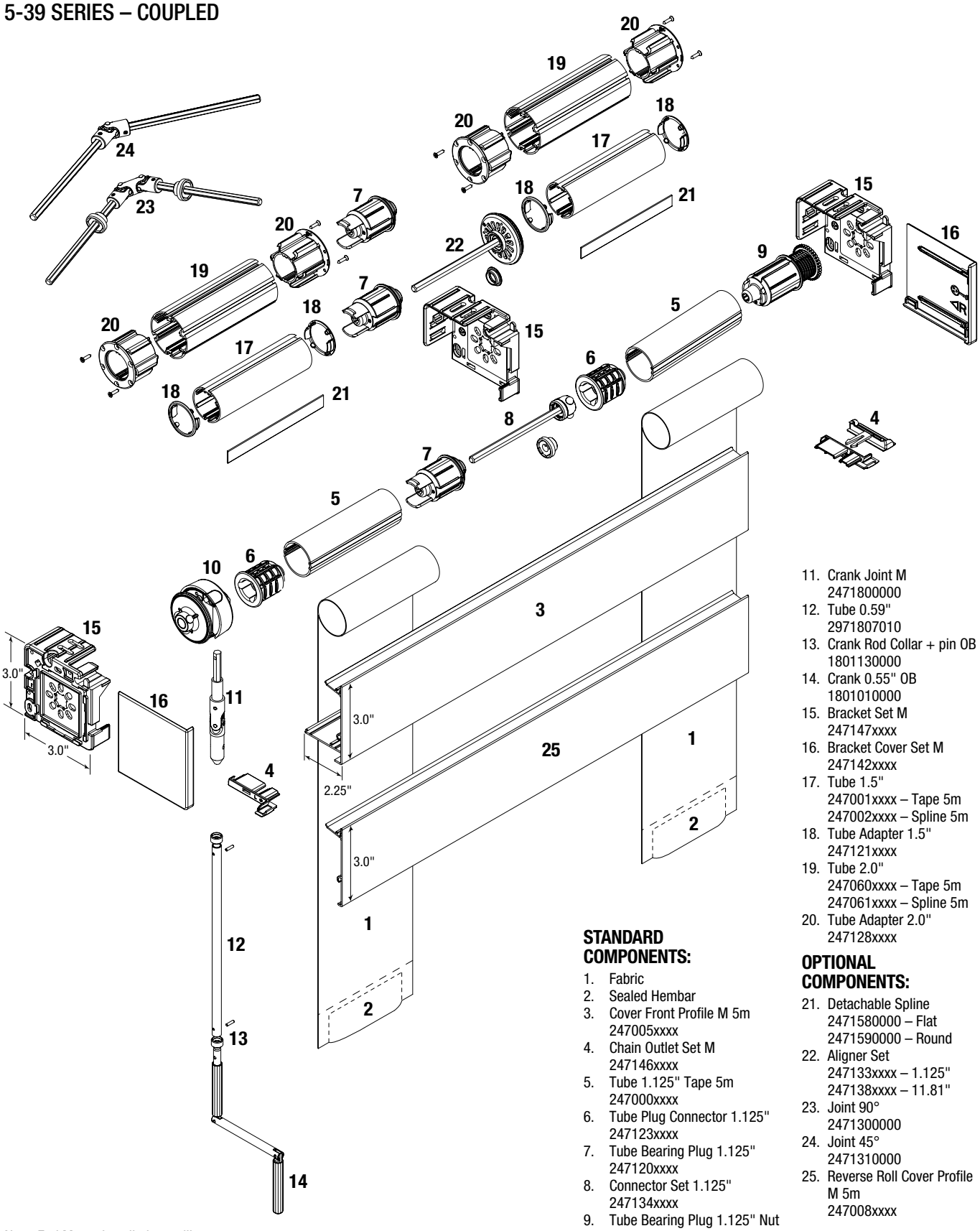

Note: End Mount Installations will not receive a Bracket Cover Set and must be specified when ordering.

STANDARD COMPONENTS:

1. Fabric
2. Sealed Hembar
3. Cover Front Profile M 5m
   247005xxxx
4. Chain Outlet Set M
   247146xxxx
5. Tube 1.125" Tape 5m
   247000xxxx
6. Tube Plug Connector 1.125"
   247123xxxx
7. Tube Bearing Plug 1.125"
   247120xxxx
8. Connector Set 1.125"
   247134xxxx
9. Tube Bearing Plug 1.125" Nut
   247129xxxx
10. Crank Drive M
    247156xxxx
11. Crank Joint M
    2471800000
12. Tube 0.59"
    2971807010
13. Crank Rod Collar + pin OB
    1801130000
14. Crank 0.55" OB
    1801010000
15. Bracket Set M
    247147xxxx
16. Bracket Cover Set M
    247142xxxx
17. Tube 1.5"
    247001xxxx – Tape 5m
    247002xxxx – Spline 5m
18. Tube Adapter 1.5"
    247121xxxx
19. Tube 2.0"
    247060xxxx – Tape 5m
    247061xxxx – Spline 5m
20. Tube Adapter 2.0"
    247128xxxx

OPTIONAL COMPONENTS:

21. Detachable Spline
    2471580000 – Flat
    2471590000 – Round
22. Aligner Set
    247133xxxx – 1.125"
    247138xxxx – 11.81"
23. Joint 90°
    2471300000
24. Joint 45°
    2471310000
25. Reverse Roll Cover Profile M 5m
    247008xxxx

xxxx = 4 digit color code. See Color Chart on page 4 for list of color codes.

STANDARD CRANK OPERATED COUPLED SHADE WITH BLOCKOUT SYSTEM

5-59 SERIES – COUPLED

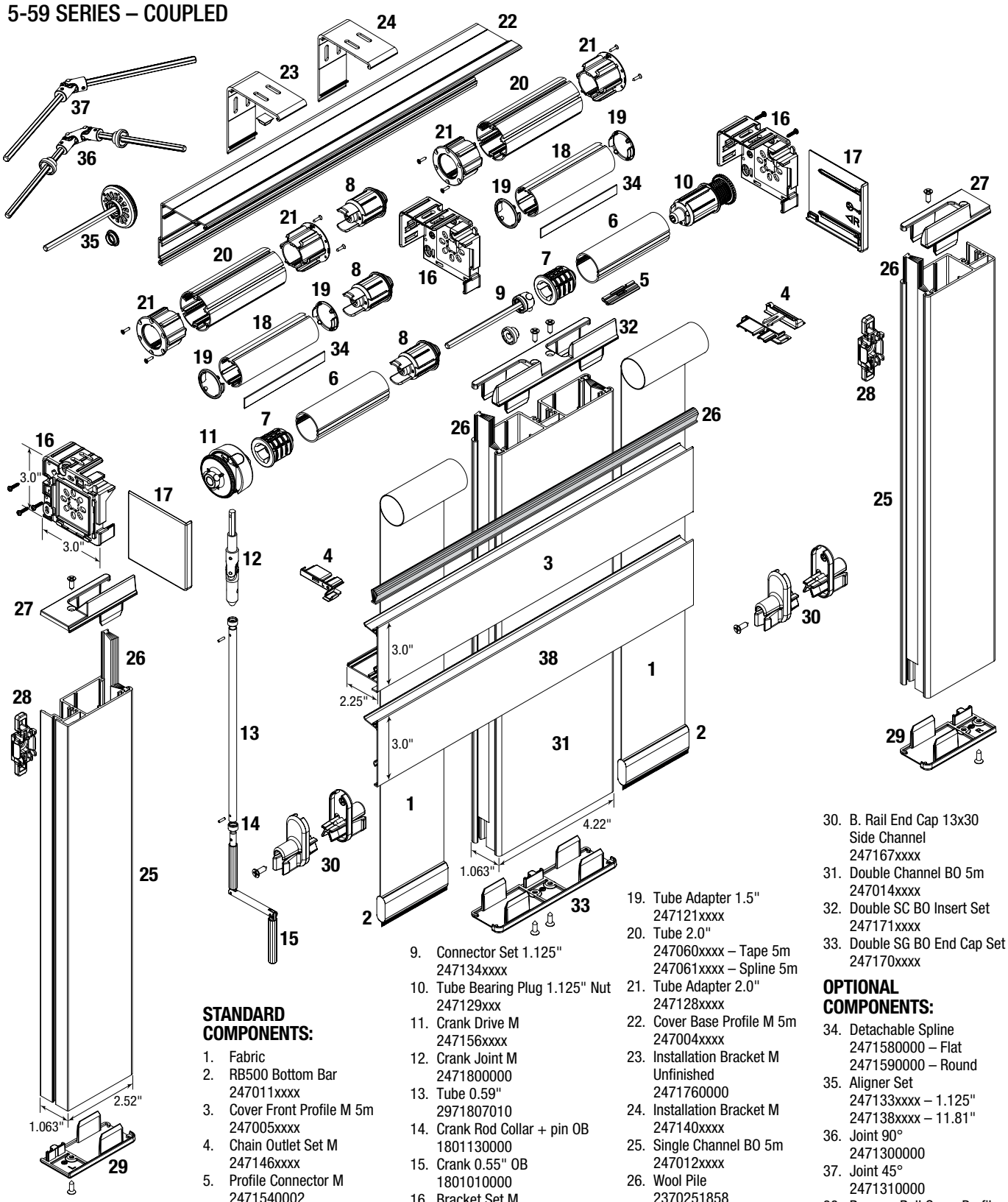

Note: End Mount Installations will not receive a Bracket Cover Set and must be specified when ordering.

STANDARD COMPONENTS:

1. Fabric
2. RB500 Bottom Bar
   247011xxxx
3. Cover Front Profile M 5m
   247005xxxx
4. Chain Outlet Set M
   247146xxxx
5. Profile Connector M
   2471540002
6. Tube 1.125" Tape 5m
   247000xxxx
7. Tube Plug Connector 1.125"
   247123xxxx
8. Tube Bearing Plug 1.125"
   247120xxxx
9. Connector Set 1.125"
   247134xxxx
10. Tube Bearing Plug 1.125" Nut
    247129xxx
11. Crank Drive M
    247156xxxx
12. Crank Joint M
    2471800000
13. Tube 0.59"
    2971807010
14. Crank Rod Collar + pin OB
    1801130000
15. Crank 0.55" OB
    1801010000
16. Bracket Set M
    247147xxxx
17. Bracket Cover Set M
    247142xxxx
18. Tube 1.5"
    247001xxxx – Tape 5m
    247002xxxx – Spline 5m
19. Tube Adapter 1.5"
    247121xxxx
20. Tube 2.0"
    247060xxxx – Tape 5m
    247061xxxx – Spline 5m
21. Tube Adapter 2.0"
    247128xxxx
22. Cover Base Profile M 5m
    247004xxxx
23. Installation Bracket M Unfinished
    2471760000
24. Installation Bracket M
    247140xxxx
25. Single Channel BO 5m
    247012xxxx
26. Wool Pile
    2370251858
27. Single SC BO Insert Set
    247168xxxx
28. Side Channel Fixing Set
    2471630000
29. Single SG BO End Cap Set
    247169xxxx
30. B. Rail End Cap 13x30 Side Channel
    247167xxxx
31. Double Channel BO 5m
    247014xxxx
32. Double SC BO Insert Set
    247171xxxx
33. Double SG BO End Cap Set
    247170xxxx

OPTIONAL COMPONENTS:

34. Detachable Spline
    2471580000 – Flat
    2471590000 – Round
35. Aligner Set
    247133xxxx – 1.125"
    247138xxxx – 11.81"
36. Joint 90°
    2471300000
37. Joint 45°
    2471310000
38. Reverse Roll Cover Profile M 5m
    247008xxxx

xxxx = 4 digit color code. See Color Chart on page 4 for list of color codes.

HEAVY DUTY CLUTCH SYSTEM

5-211 SERIES – CHAIN OPERATION

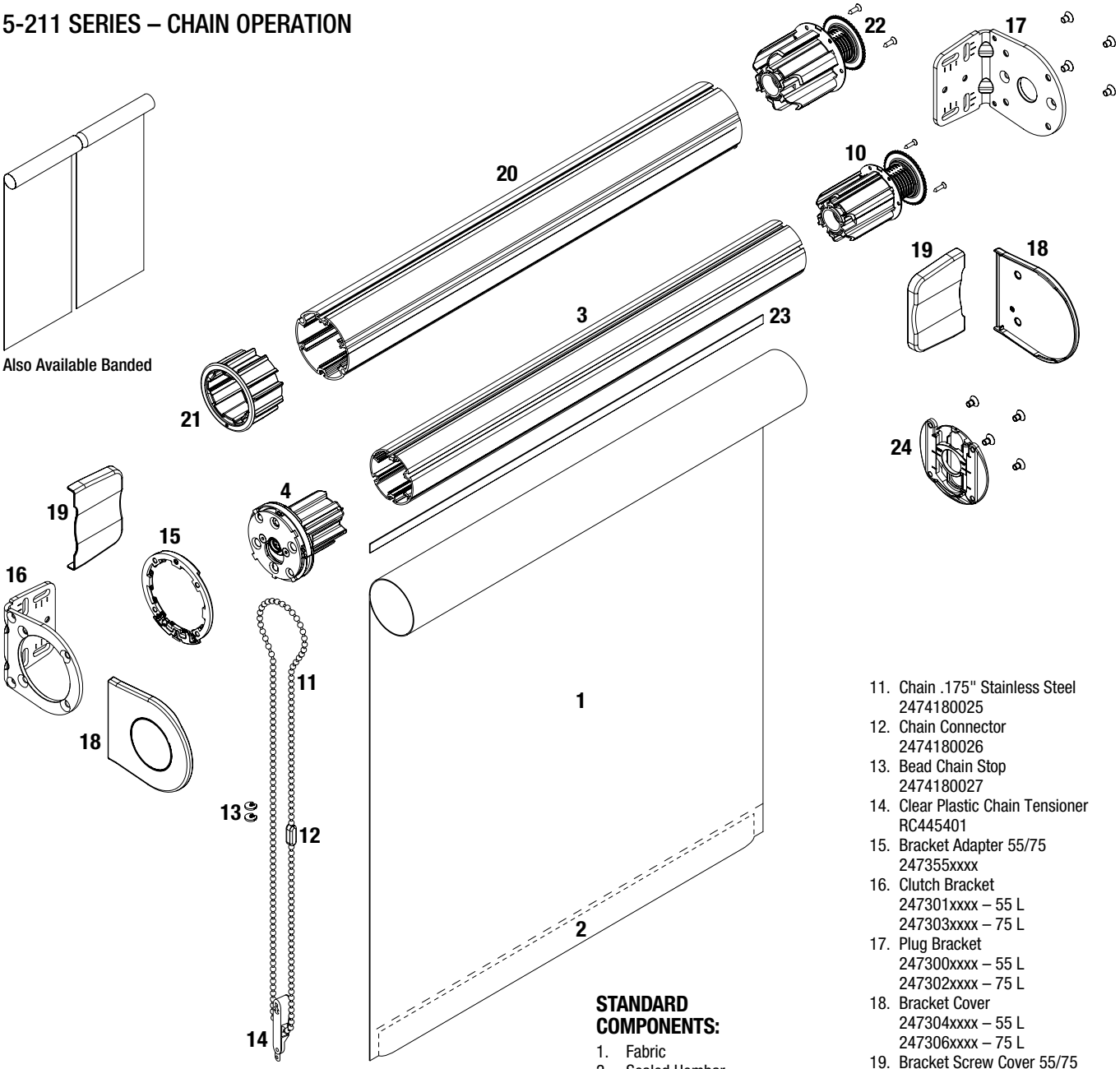

STANDARD COMPONENTS:

1. Fabric
2. Sealed Hembar
3. Tube 2.0"
   247060xxxx – Tape 5m
4. Clutch 1:1
   247357xxxx
5. CS-L Connector
   2473671601
6. Driving Tube Alu 12 mm
   1840497080
7. CS-L Tensioner
   2473691601
8. CS-L Spring
   2473640000 – 1.2
   2473650000 – 1.5
   2473660000 – 1.8
   2473720000 – 2.1
   2473730000 – 2.4
9. CS-L Rubber Tube (Under Spring)
   2473681858
10. Tube Bearing Plug 2.0" Nut
    247310xxxx
11. Chain .175" Stainless Steel
    2474180025
12. Chain Connector
    2474180026
13. Bead Chain Stop
    2474180027
14. Clear Plastic Chain Tensioner
    RC445401
15. Bracket Adapter 55/75
    247355xxxx
16. Clutch Bracket
    247301xxxx – 55 L
    247303xxxx – 75 L
17. Plug Bracket
    247300xxxx – 55 L
    247302xxxx – 75 L
18. Bracket Cover
    247304xxxx – 55 L
    247306xxxx – 75 L
19. Bracket Screw Cover 55/75
    247308xxxx – Screw Cover
    247309xxxx – Screw Cover Cable
20. Tube 2.5"
    247052xxxx – Tape 5m
    247053xxxx – Spline 5m
21. Tube Adapter 2.5"
    247326xxxx
22. Tube Bearing Plug 2.5" Nut
    247311xxxx

OPTIONAL COMPONENTS:

23. Detachable Spline
    2471580000 – Flat
    2471590000 – Round
24. Leveler 2.0"
    247344xxxx

xxxx = 4 digit color code.
See Color Chart on page 4 for list of color codes.

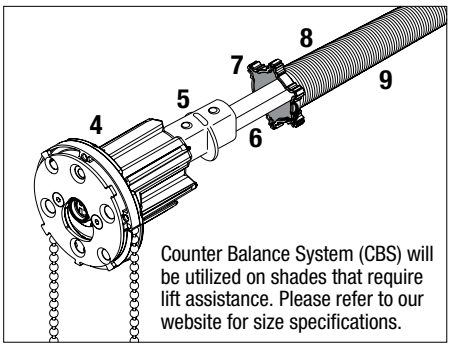

Counter Balance System (CBS) will be utilized on shades that require lift assistance. Please refer to our website for size specifications.

HEAVY DUTY BRACKET MOUNTING LOCATIONS

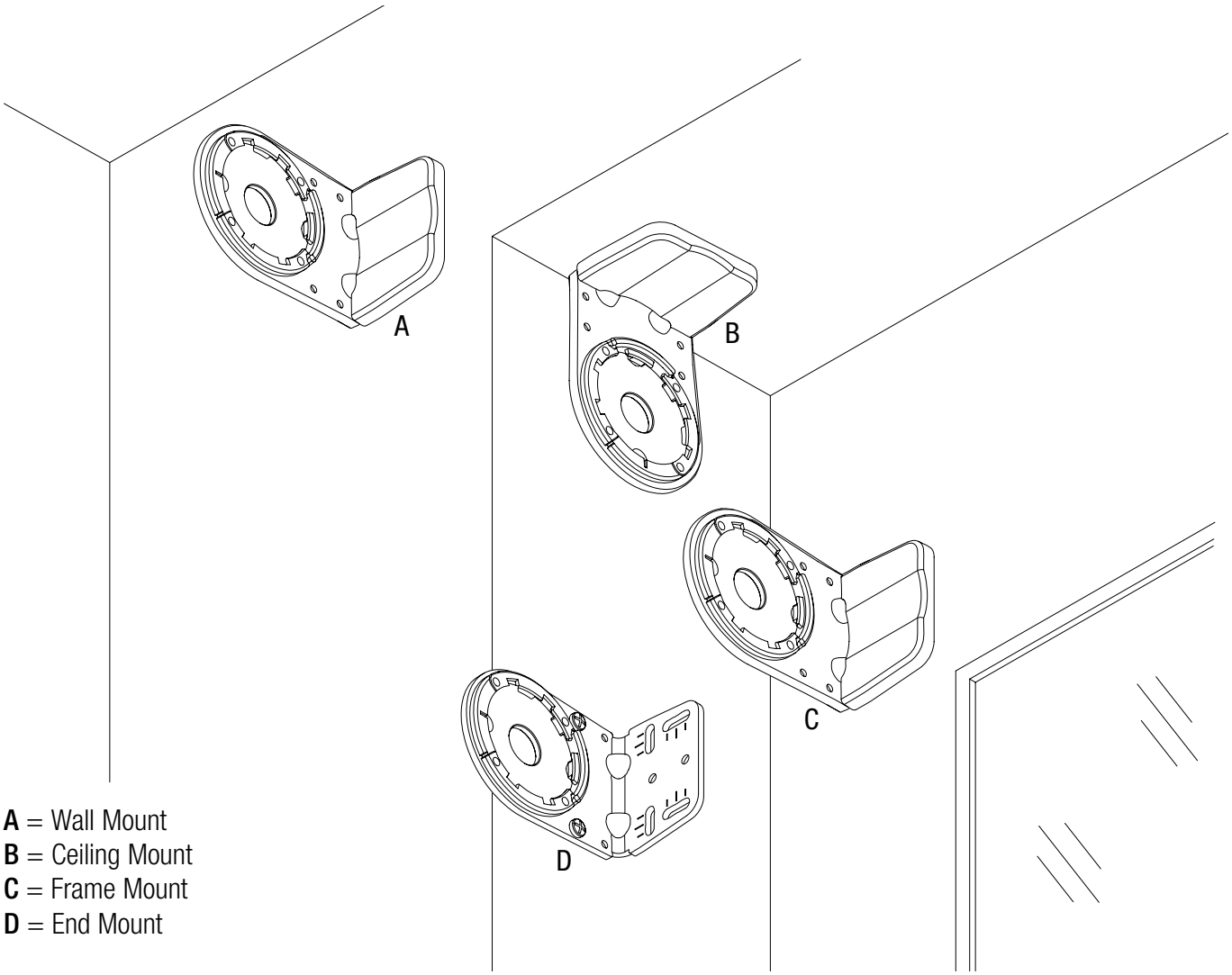

A = Wall Mount
B = Ceiling Mount
C = Frame Mount
D = End Mount

HEAVY DUTY BRACKET DIMENSIONS

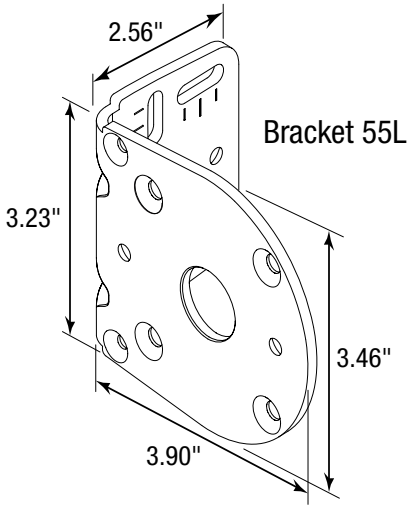

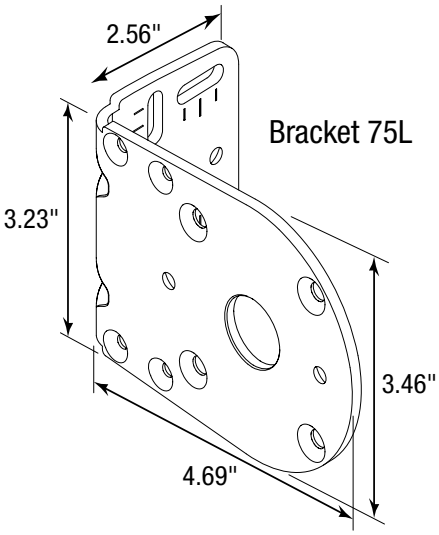

BRACKET 55L STANDARD SHADE MOUNTING

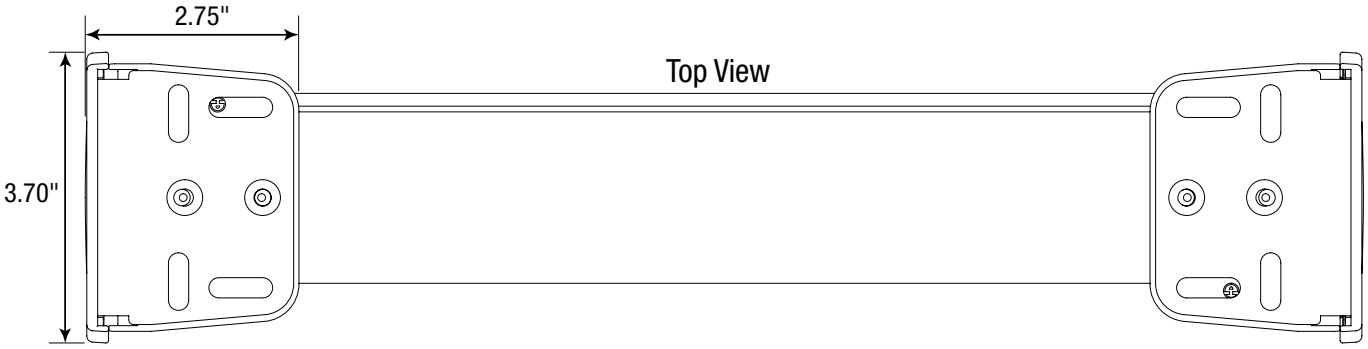

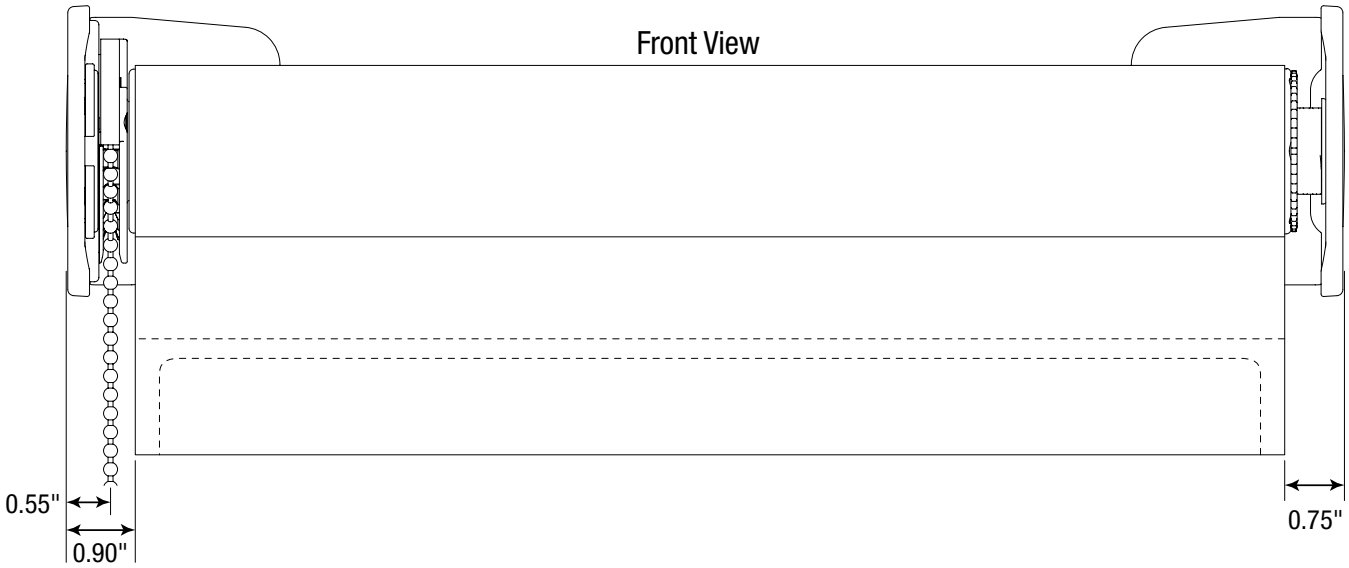

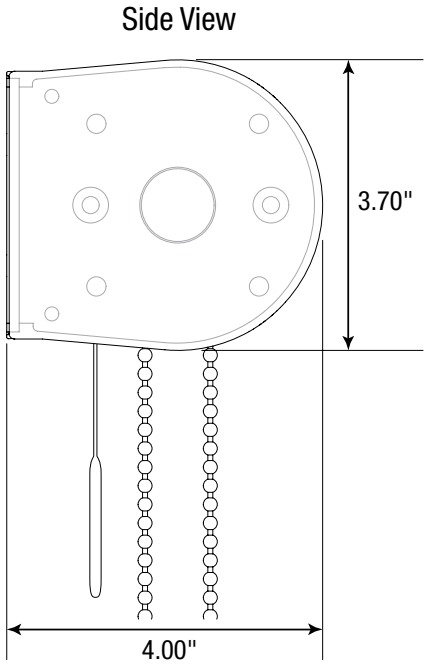

BRACKET 75L EXTENDED SHADE MOUNTING

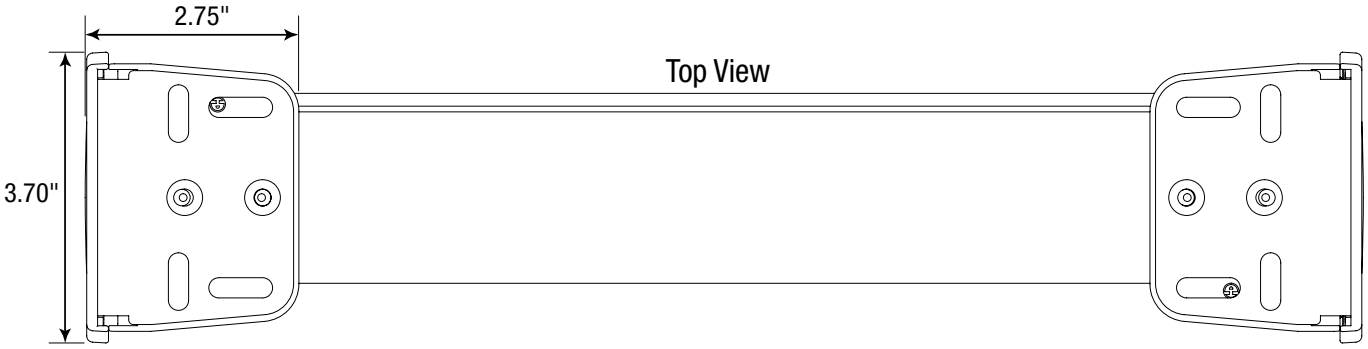

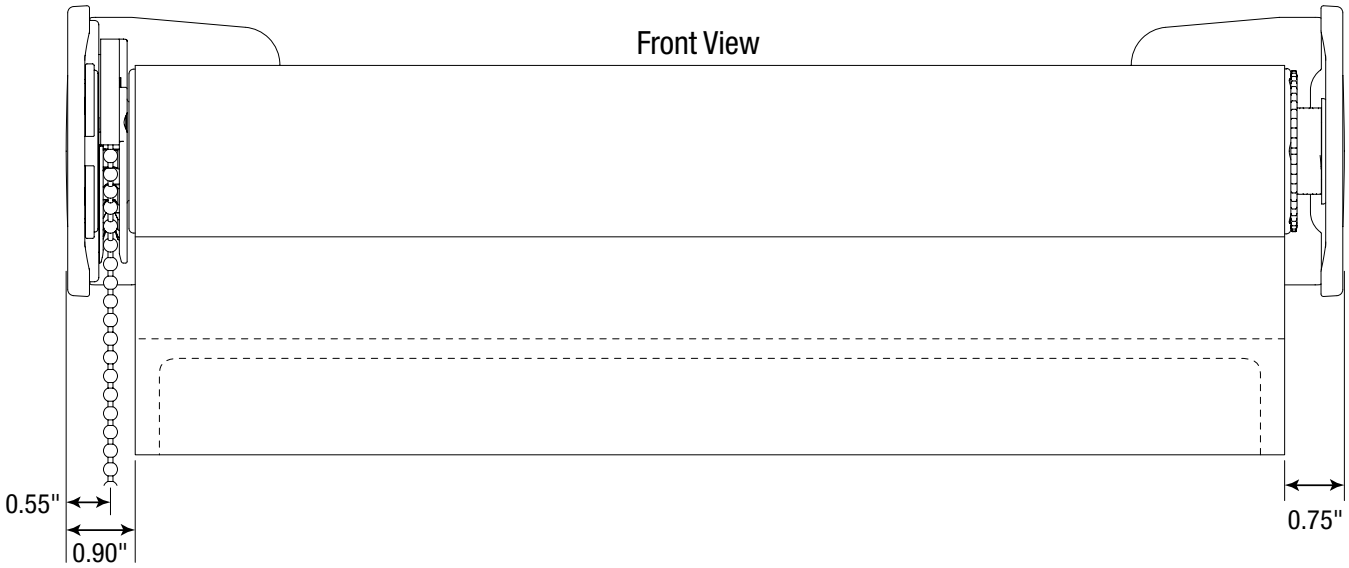

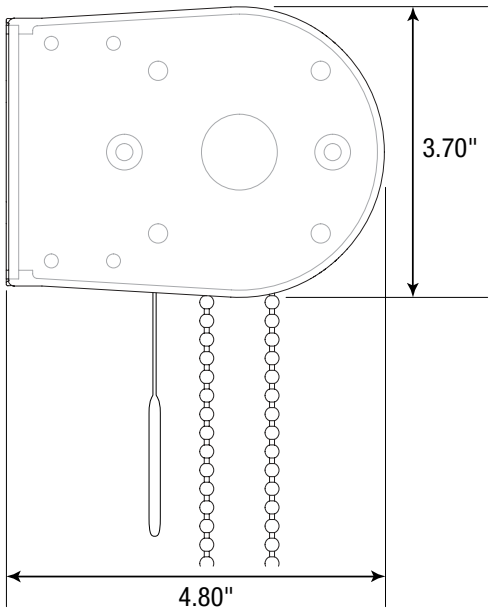

HEAVY DUTY CLUTCH SYSTEM WITH FASCIA

5-231 SERIES – CHAIN OPERATION

Also Available Banded

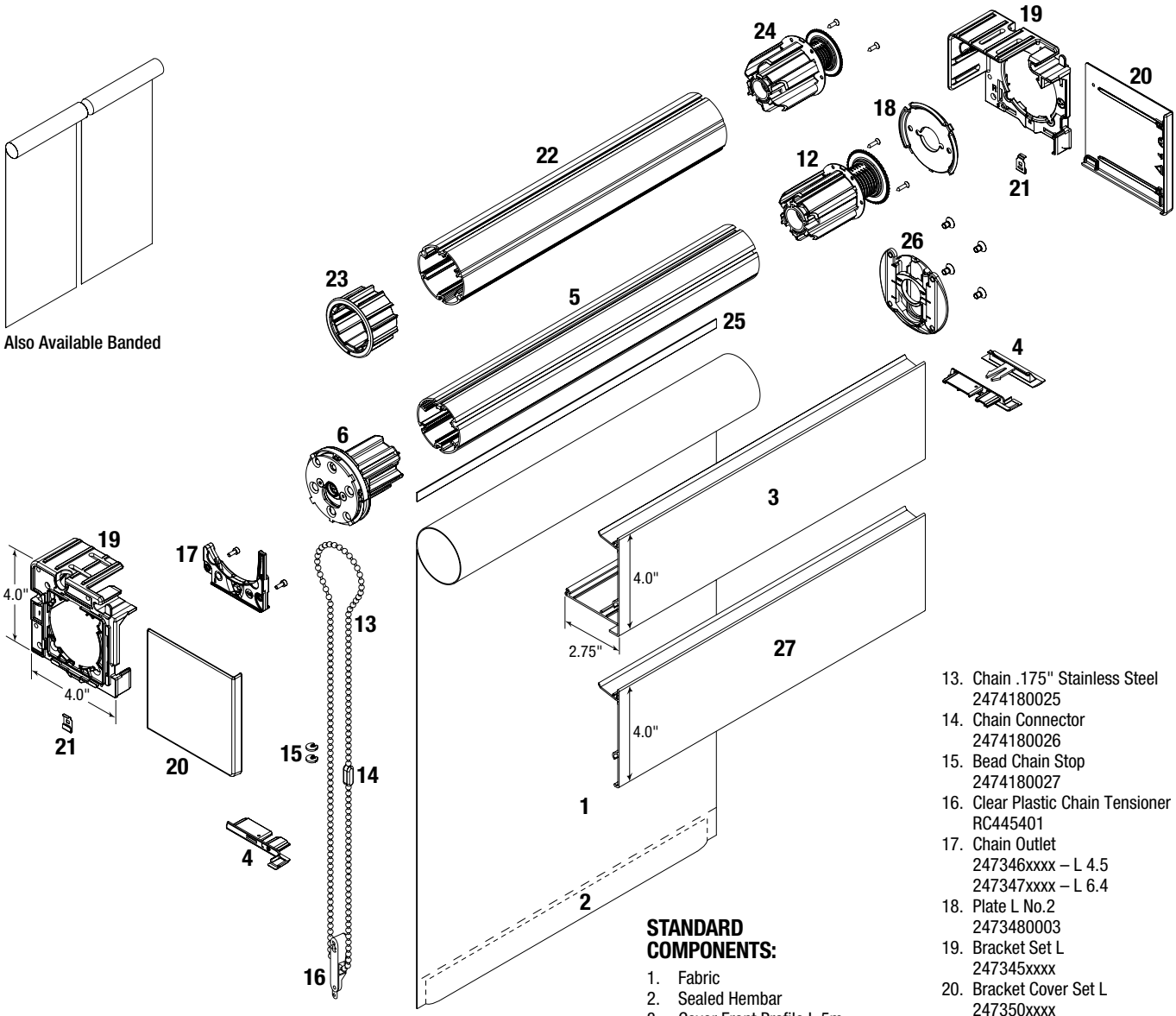

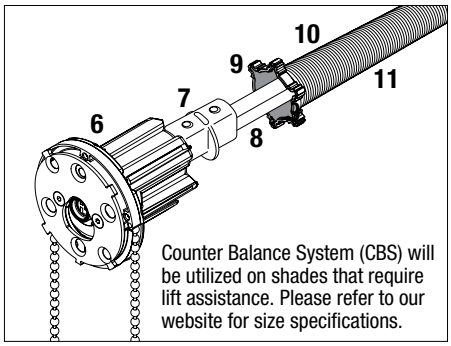

Note: End Mount Installations will not receive a Bracket Cover Set and must be specified when ordering.

STANDARD COMPONENTS:

1. Fabric
2. Sealed Hembar
3. Cover Front Profile L 5m
   247055xxxx
4. Chain Outlet Set L
   247334xxxx
5. Tube 2.0"
   247060xxxx – Tape 5m
6. Clutch 1:1
   247357xxxx
7. CS-L Connector
   2473671601
8. Driving Tube Alu 12 mm
   1840497080
9. CS-L Tensioner
   2473691601
10. CS-L Spring
    2473640000 – 1.2
    2473650000 – 1.5
    2473660000 – 1.8
    2473720000 – 2.1
    2473730000 – 2.4
11. CS-L Rubber Tube (Under Spring)
    2473681858
12. Tube Bearing Plug 2.0" Nut
    247310xxxx
13. Chain .175" Stainless Steel
    2474180025
14. Chain Connector
    2474180026
15. Bead Chain Stop
    2474180027
16. Clear Plastic Chain Tensioner
    RC445401
17. Chain Outlet
    247346xxxx – L 4.5
    247347xxxx – L 6.4
18. Plate L No.2
    2473480003
19. Bracket Set L
    247345xxxx
20. Bracket Cover Set L
    247350xxxx
21. Locking Clip L
    2473430002
22. Tube 2.5"
    247052xxxx – Tape 5m
    247053xxxx – Spline 5m
23. Tube Adapter 2.5"
    247326xxxx
24. Tube Bearing Plug 2.5" Nut
    247311xxxx

OPTIONAL COMPONENTS:

25. Detachable Spline
    2471580000 – Flat
    2471590000 – Round
26. Leveler 2.0"
    247344xxxx
27. Reverse Roll Cover Profile L 5m
    247058xxxx

xxxx = 4 digit color code. See Color Chart on page 4 for list of color codes.

HEAVY DUTY CLUTCH WITH BLOCKOUT SYSTEM

5-251 SERIES – CHAIN OPERATION

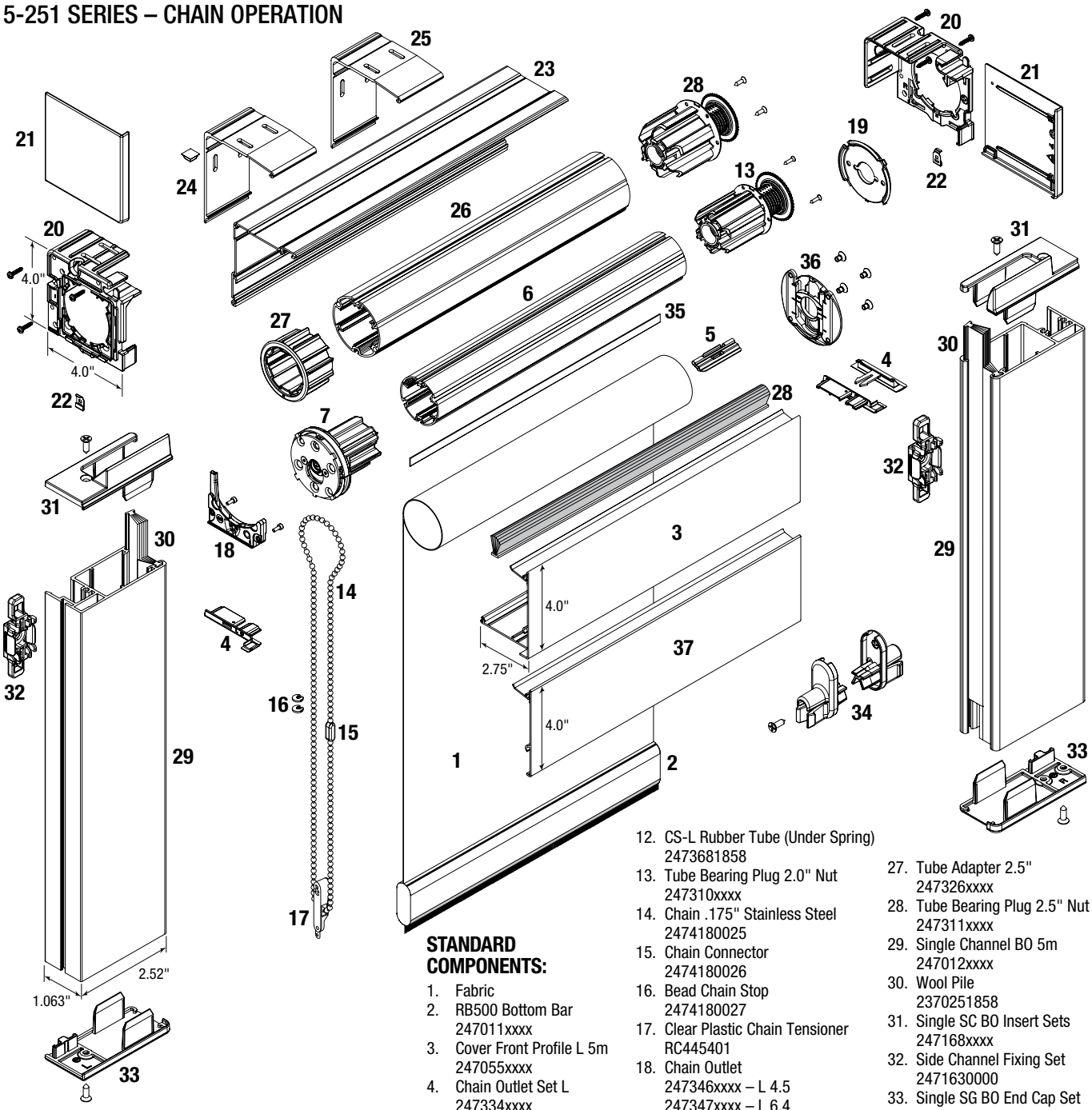

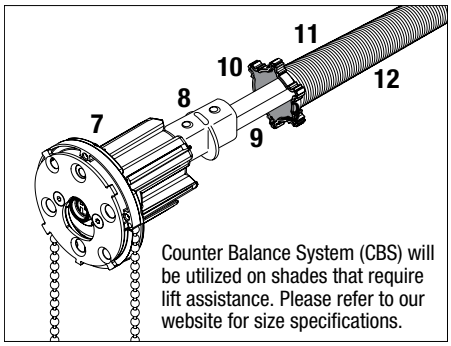

Counter Balance System (CBS) will be utilized on shades that require lift assistance. Please refer to our website for size specifications.

Note: End Mount Installations will not receive a Bracket Cover Set and must be specified when ordering.

STANDARD COMPONENTS:

1. Fabric
2. RB500 Bottom Bar
   247011xxxx
3. Cover Front Profile L 5m
   247055xxxx
4. Chain Outlet Set L
   247334xxxx
5. Profile Connector L
   2473360002
6. Tube 2.0"
   247060xxxx – Tape 5m
7. Clutch 1:1
   247357xxxx
8. CS-L Connector
   2473671601
9. Driving Tube Alu 12 mm
   1840497080
10. CS-L Tensioner
    2473691601
11. CS-L Spring
    2473640000 – 1.2
    2473650000 – 1.5
    2473660000 – 1.8
    2473720000 – 2.1
    2473730000 – 2.4
12. CS-L Rubber Tube (Under Spring)
    2473681858
13. Tube Bearing Plug 2.0" Nut
    247310xxxx
14. Chain .175" Stainless Steel
    2474180025
15. Chain Connector
    2474180026
16. Bead Chain Stop
    2474180027
17. Clear Plastic Chain Tensioner
    RC445401
18. Chain Outlet
    247346xxxx – L 4.5
    247347xxxx – L 6.4
19. Plate L No.2
    2473480003
20. Bracket Set L
    247345xxxx
21. Bracket Cover Set L
    247350xxxx
22. Locking Clip L
    2473430002
23. Closing Profile L 5m
    247056xxxx
24. Installation Bracket L
    Unfinished
    2473420000
25. Installation Bracket L
    247341xxxx
26. Tube 2.5"
    247052xxxx – Tape 5m
    247053xxxx – Spline 5m
27. Tube Adapter 2.5"
    247326xxxx
28. Tube Bearing Plug 2.5" Nut
    247311xxxx
29. Single Channel BO 5m
    247012xxxx
30. Wool Pile
    2370251858
31. Single SC BO Insert Sets
    247168xxxx
32. Side Channel Fixing Set
    2471630000
33. Single SG BO End Cap Set
    247169xxxx
34. B. Rail End Cap 13x30
    S. Channel
    247167xxxx

OPTIONAL COMPONENTS:

35. Detachable Spline
    2471580000 – Flat
    2471590000 – Round
36. Leveler 2.0"
    247344xxxx
37. Reverse Roll Cover Profile
    L 5m
    247058xxxx

xxxx = 4 digit color code. See Color Chart on page 4 for list of color codes.

HEAVY DUTY CLUTCH SYSTEM WITH EXTRUDED POCKET

5-211 SERIES – CHAIN OPERATION

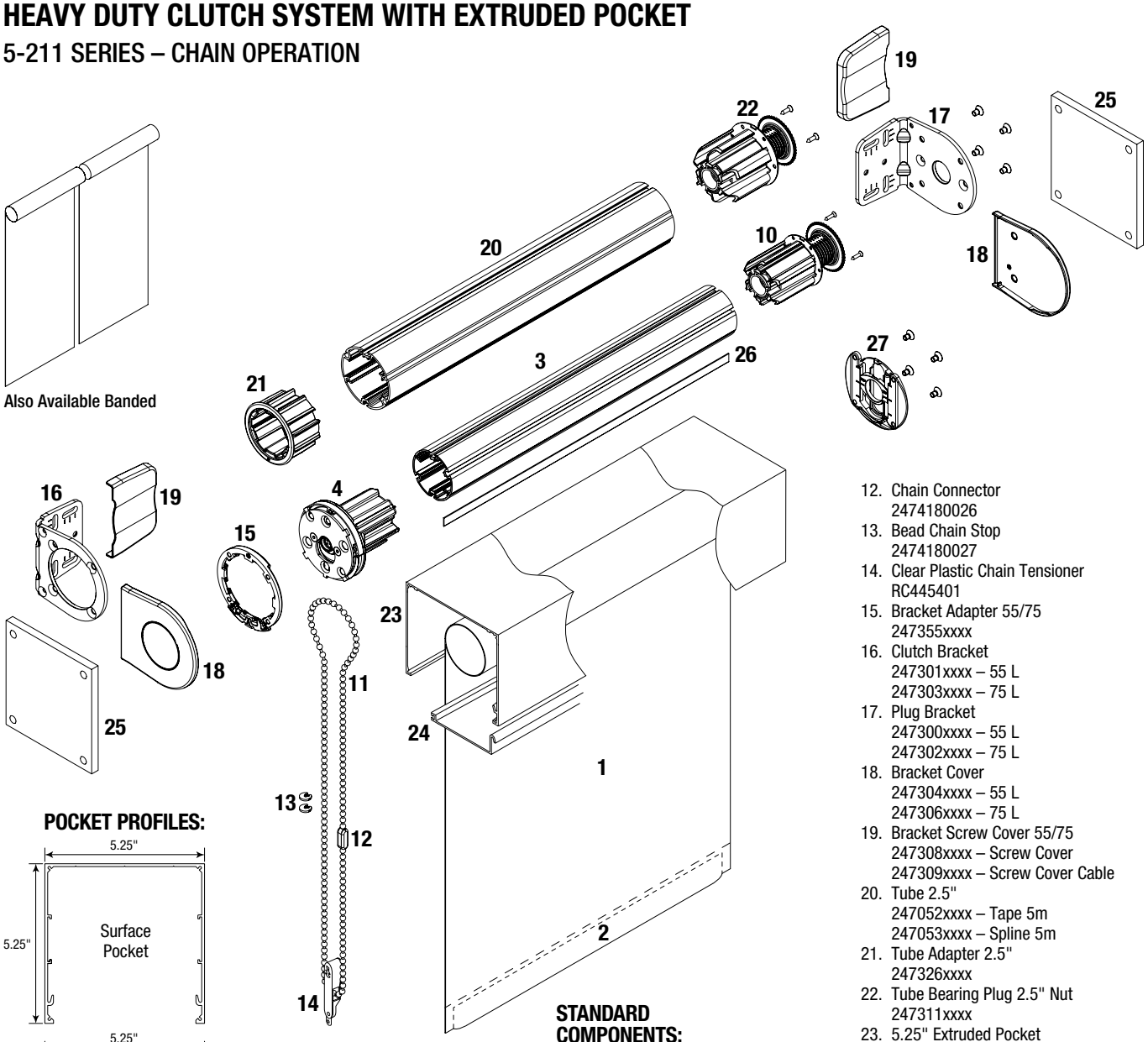

POCKET PROFILES:

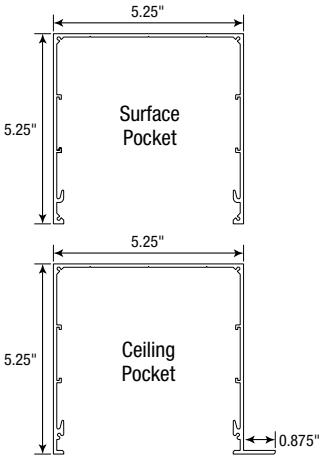

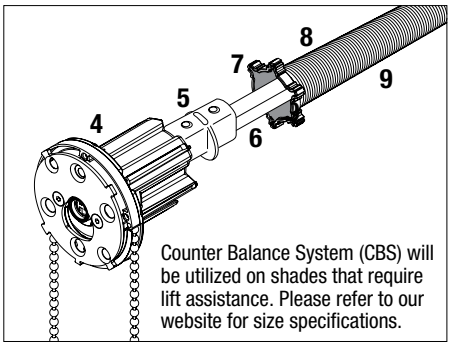

STANDARD COMPONENTS:

1. Fabric
2. Sealed Hembar
3. Tube 2.0"
   247060xxxx – Tape 5m
4. Clutch 1:1
   247357xxxx
5. CS-L Connector
   2473671601
6. Driving Tube Alu 12 mm
   1840497080
7. CS-L Tensioner
   2473691601
8. CS-L Spring
   2473640000 – 1.2
   2473650000 – 1.5
   2473660000 – 1.8
   2473720000 – 2.1
   2473730000 – 2.4
9. CS-L Rubber Tube (Under Spring)
   2473681858
10. Tube Bearing Plug 2.0" Nut
    247310xxxx
11. Chain .175" Stainless Steel
    2474180025
12. Chain Connector
    2474180026
13. Bead Chain Stop
    2474180027
14. Clear Plastic Chain Tensioner
    RC445401
15. Bracket Adapter 55/75
    247355xxxx
16. Clutch Bracket
    247301xxxx – 55 L
    247303xxxx – 75 L
17. Plug Bracket
    247300xxxx – 55 L
    247302xxxx – 75 L
18. Bracket Cover
    247304xxxx – 55 L
    247306xxxx – 75 L
19. Bracket Screw Cover 55/75
    247308xxxx – Screw Cover
    247309xxxx – Screw Cover Cable
20. Tube 2.5"
    247052xxxx – Tape 5m
    247053xxxx – Spline 5m
21. Tube Adapter 2.5"
    247326xxxx
22. Tube Bearing Plug 2.5" Nut
    247311xxxx
23. 5.25" Extruded Pocket
    RC502000 – Ceiling Pocket Anodized
    RC502675 – Ceiling Pocket White
    RC503000 – Surface Pocket Anodized
    RC503675 – Surface Pocket White
24. 2" Pocket Bottom Closure
    RC500000 – Anodized
    RC500675 – White
    3" Pocket Bottom Closure
    RC501000 – Anodized
    RC501675 – White

OPTIONAL COMPONENTS:

25. Pocket End Plate
    RC506675 – White
    RC506000 – Anodized
26. Detachable Spline
    2471580000 – Flat
    2471590000 – Round
27. Leveler 2.0"
    247344xxxx

xxxx = 4 digit color code.
See Color Chart on page 4 for list of color codes.

HEAVY DUTY CLUTCH SYSTEM COUPLED

5-217 SERIES – COUPLED UNIT

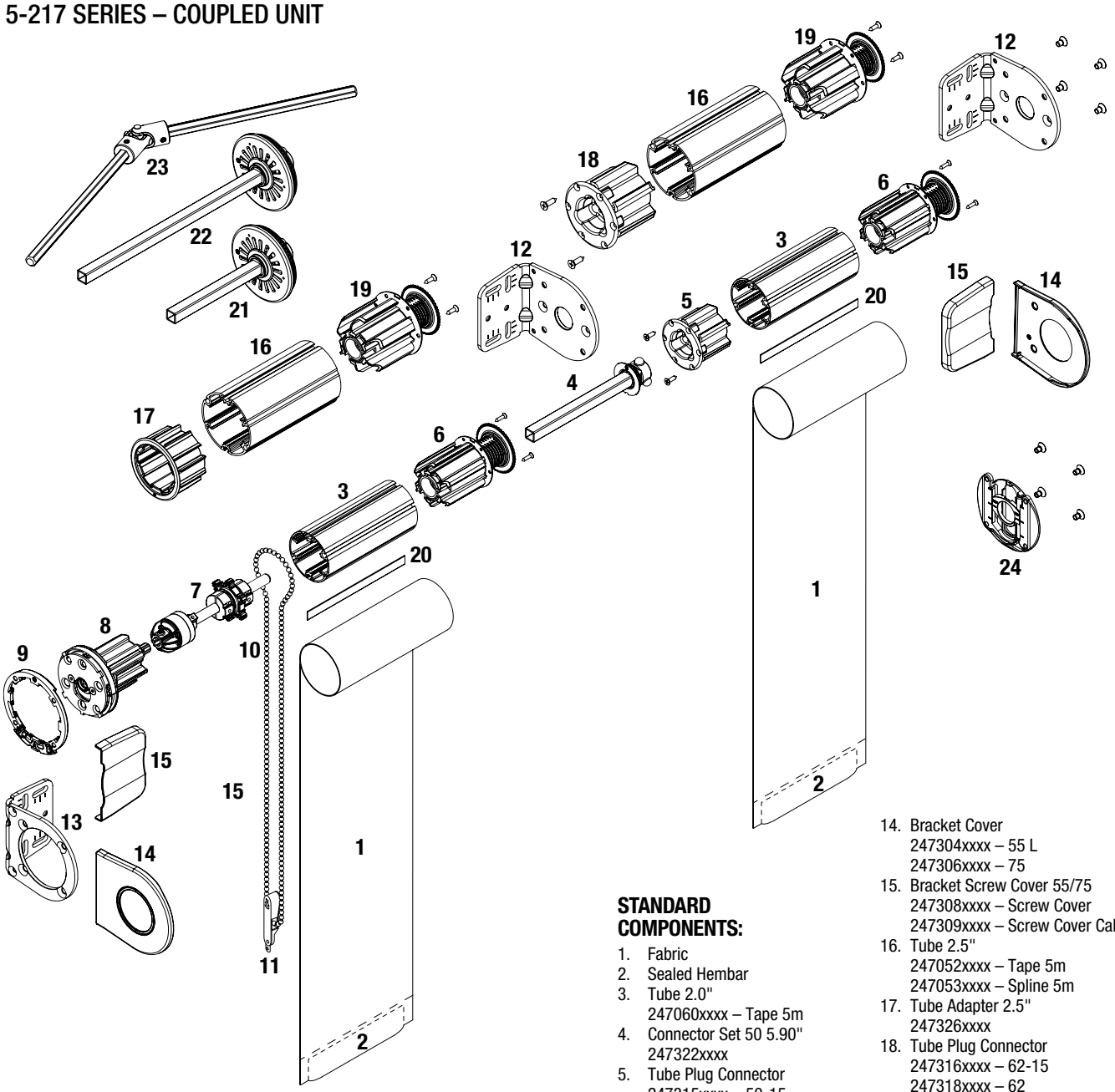

STANDARD COMPONENTS:

1. Fabric
2. Sealed Hembar
3. Tube 2.0"
   247060xxxx – Tape 5m
4. Connector Set 50 5.90"
   247322xxxx
5. Tube Plug Connector
   247315xxxx – 50-15
   247317xxxx – 50
6. Tube Bearing Plug 2.0" Nut
   247310xxxx
7. Auto Stop 2.0"/2.5"
   2473281601
8. Control Set 50 3:1 Ch. 4.5
   247319xxxx
9. Bracket Adapter 55/75
   247355xxxx
10. Chain .175" Stainless Steel
    2474180025
11. Clear Plastic Chain Tensioner
    RC445401
12. Plug Bracket
    247300xxxx – 55 L
    247302xxxx – 75 L
13. Clutch Bracket
    247301xxxx – 55 L
    247303xxxx – 75 L
14. Bracket Cover
    247304xxxx – 55 L
    247306xxxx – 75
15. Bracket Screw Cover 55/75
    247308xxxx – Screw Cover
    247309xxxx – Screw Cover Cable
16. Tube 2.5"
    247052xxxx – Tape 5m
    247053xxxx – Spline 5m
17. Tube Adapter 2.5"
    247326xxxx
18. Tube Plug Connector
    247316xxxx – 62-15
    247318xxxx – 62
19. Tube Bearing Plug 2.5" Nut
    247311xxxx

OPTIONAL COMPONENTS:

20. Detachable Spline
    2471580000 – Flat
    2471590000 – Round
21. Aligner Set 50 5.9"
    247323xxxx
22. Aligner Set 50 11.81"
    247329xxxx
23. Joint 45° L
    2473210000
24. Leveler 2.0"
    247344xxxx

xxxx = 4 digit color code.
See Color Chart on page 4 for list of color codes.

HEAVY DUTY CLUTCH SYSTEM COUPLED WITH FASCIA

5-237 SERIES – COUPLED UNIT

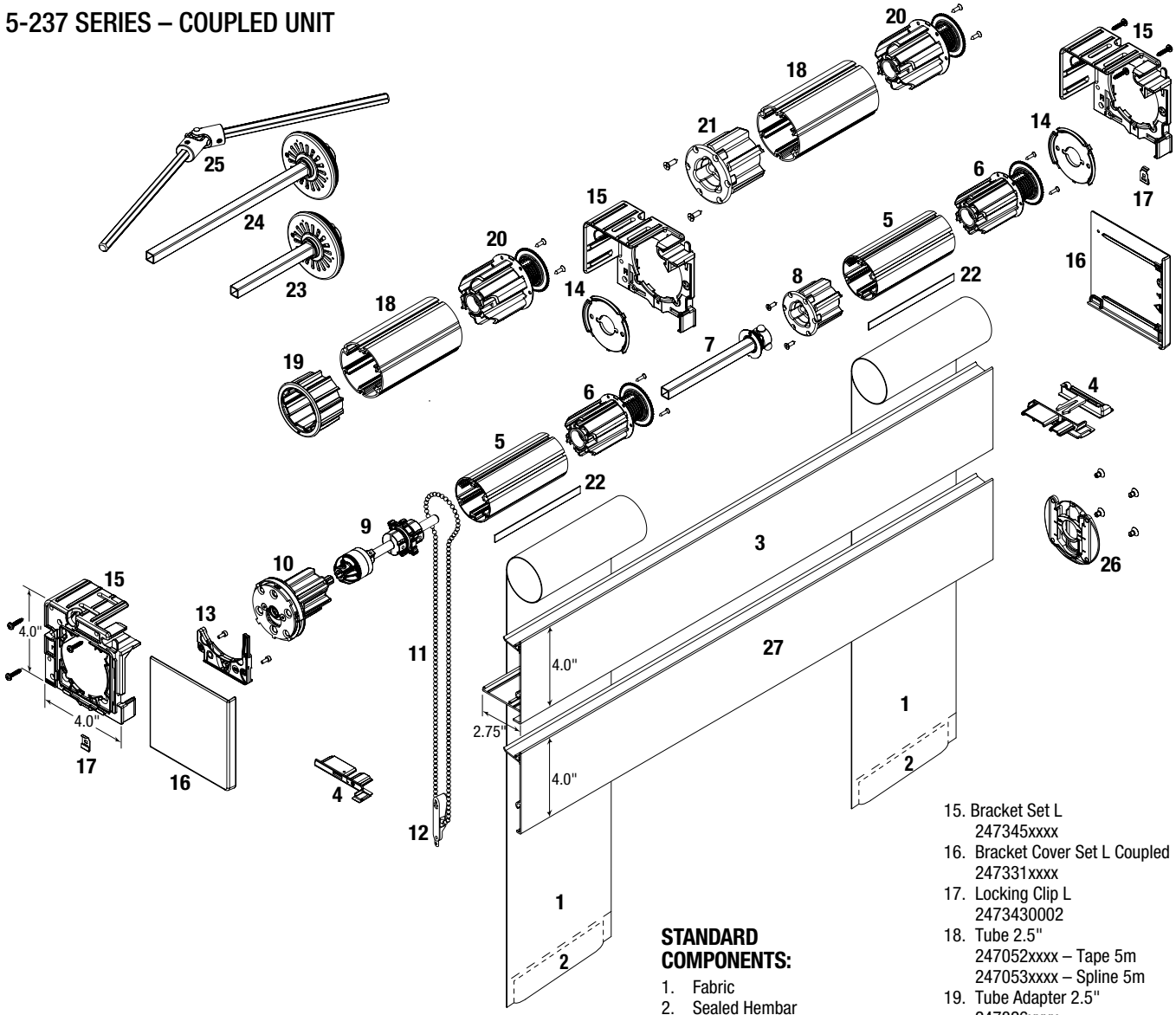

STANDARD COMPONENTS:

1. Fabric
2. Sealed Hembar
3. Cover Front Profile L 5m
   247055xxxx
4. Chain Outlet Set L
   247334xxxx
5. Tube 2.0"
   247060xxxx – Tape 5m
6. Tube Bearing Plug 2.0" Nut
   247310xxxx
7. Connector Set 50 5.90"
   247322xxxx
8. Tube Plug Connector
   247315xxxx – 50-15
   247317xxxx – 50
9. Auto Stop 2.0"/2.5"
   2473281601
10. Control Set 50 3:1 Ch. 4.5
    247319xxxx
11. Chain .175" Stainless Steel
    2474180025
12. Clear Plastic Chain Tensioner
    RC445401
13. Chain Outlet
    247346xxxx – L 4.5
    247347xxxx – L 6.4
14. Plate L No.2
    2473480003
15. Bracket Set L
    247345xxxx
16. Bracket Cover Set L Coupled
    247331xxxx
17. Locking Clip L
    2473430002
18. Tube 2.5"
    247052xxxx – Tape 5m
    247053xxxx – Spline 5m
19. Tube Adapter 2.5"
    247326xxxx
20. Tube Bearing Plug 2.5" Nut
    247311xxxx
21. Tube Plug Connector
    247316xxxx – 62-15
    247318xxxx – 62

OPTIONAL COMPONENTS:

22. Detachable Spline
    2471580000 – Flat
    2471590000 – Round
23. Aligner Set 50 5.9"
    247323xxxx
24. Aligner Set 50 11.81"
    247329xxxx
25. Joint 45° L
    2473210000
26. Leveler 2.0"
    247344xxxx
27. Reverse Roll Cover Profile L 5m
    247058xxxx

xxxx = 4 digit color code. See Color Chart on page 4 for list of color codes.

Note: End Mount Installations will not receive a Bracket Cover Set and must be specified when ordering.

HEAVY DUTY CLUTCH COUPLED WITH BLOCKOUT SYSTEM

5-257 SERIES – CHAIN OPERATION

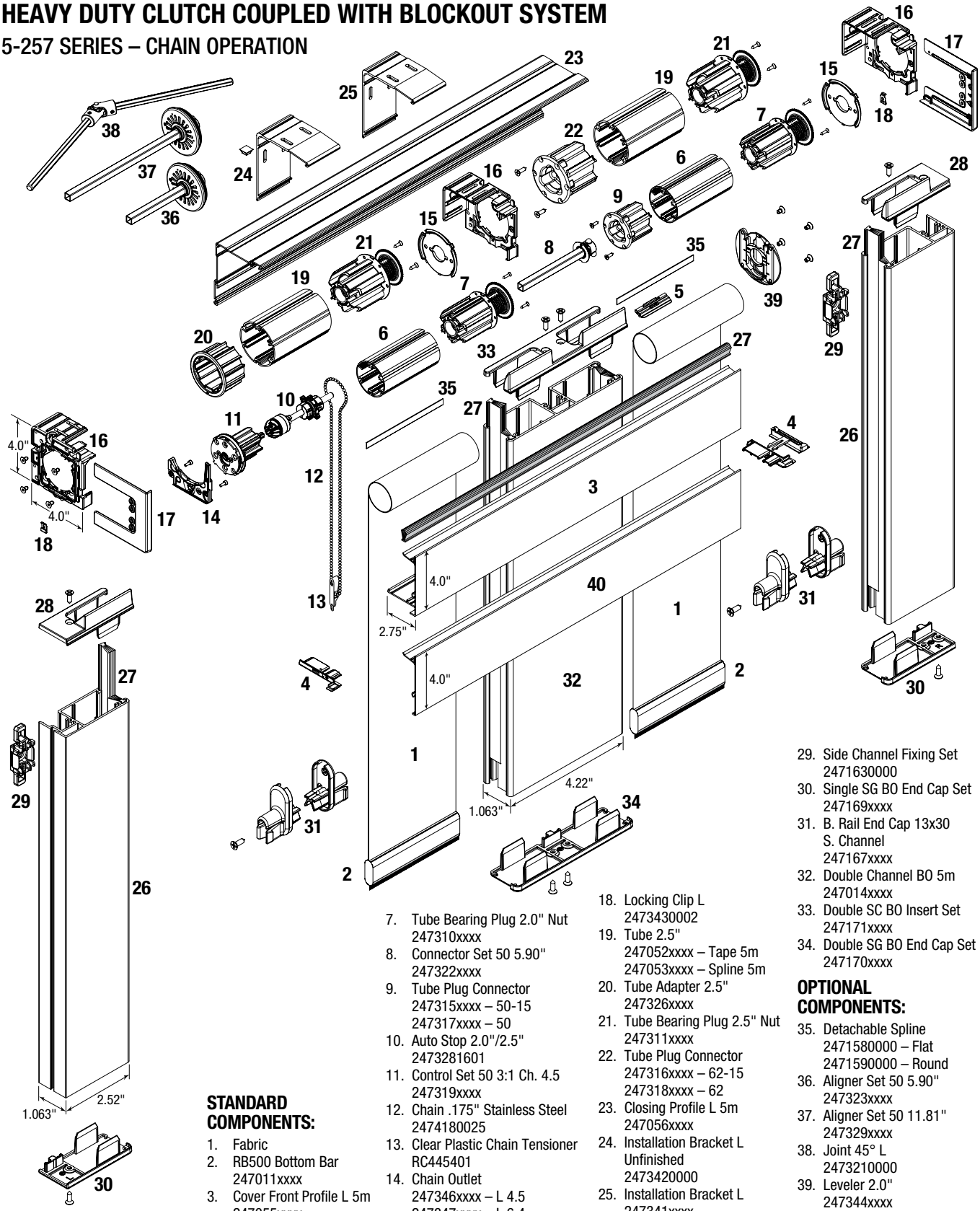

Note: End Mount Installations will not receive a Bracket Cover Set and must be specified when ordering.

STANDARD COMPONENTS:

1. Fabric
2. RB500 Bottom Bar
   247011xxxx
3. Cover Front Profile L 5m
   247055xxxx
4. Chain Outlet Set L
   247334xxxx
5. Profile Connector L
   2473360002
6. Tube 2.0"
   247060xxxx – Tape 5m
7. Tube Bearing Plug 2.0" Nut
   247310xxxx
8. Connector Set 50 5.90"
   247322xxxx
9. Tube Plug Connector
   247315xxxx – 50-15
   247317xxxx – 50
10. Auto Stop 2.0"/2.5"
    2473281601
11. Control Set 50 3:1 Ch. 4.5
    247319xxxx
12. Chain .175" Stainless Steel
    2474180025
13. Clear Plastic Chain Tensioner
    RC445401
14. Chain Outlet
    247346xxxx – L 4.5
    247347xxxx – L 6.4
15. Plate L No.2
    2473480003
16. Bracket Set L
    247345xxxx
17. Bracket Cover Set L Coupled
    247331xxxx
18. Locking Clip L
    2473430002
19. Tube 2.5"
    247052xxxx – Tape 5m
    247053xxxx – Spline 5m
20. Tube Adapter 2.5"
    247326xxxx
21. Tube Bearing Plug 2.5" Nut
    247311xxxx
22. Tube Plug Connector
    247316xxxx – 62-15
    247318xxxx – 62
23. Closing Profile L 5m
    247056xxxx
24. Installation Bracket L
    Unfinished
    2473420000
25. Installation Bracket L
    247341xxxx
26. Single Channel BO 5m
    247012xxxx
27. Wool Pile
    2370251858
28. Single SC BO Insert Sets
    247168xxxx
29. Side Channel Fixing Set
    2471630000
30. Single SG BO End Cap Set
    247169xxxx
31. B. Rail End Cap 13x30
    S. Channel
    247167xxxx
32. Double Channel BO 5m
    247014xxxx
33. Double SC BO Insert Set
    247171xxxx
34. Double SG BO End Cap Set
    247170xxxx

OPTIONAL COMPONENTS:

35. Detachable Spline
    2471580000 – Flat
    2471590000 – Round
36. Aligner Set 50 5.90"
    247323xxxx
37. Aligner Set 50 11.81"
    247329xxxx
38. Joint 45° L
    2473210000
39. Leveler 2.0"
    247344xxxx
40. Reverse Roll Cover Profile L 5m
    247058xxxx

xxxx = 4 digit color code. See Color Chart on page 4 for list of color codes.

HEAVY DUTY CLUTCH DUAL ROLLER SHADE

5-211 SERIES – CHAIN OPERATION

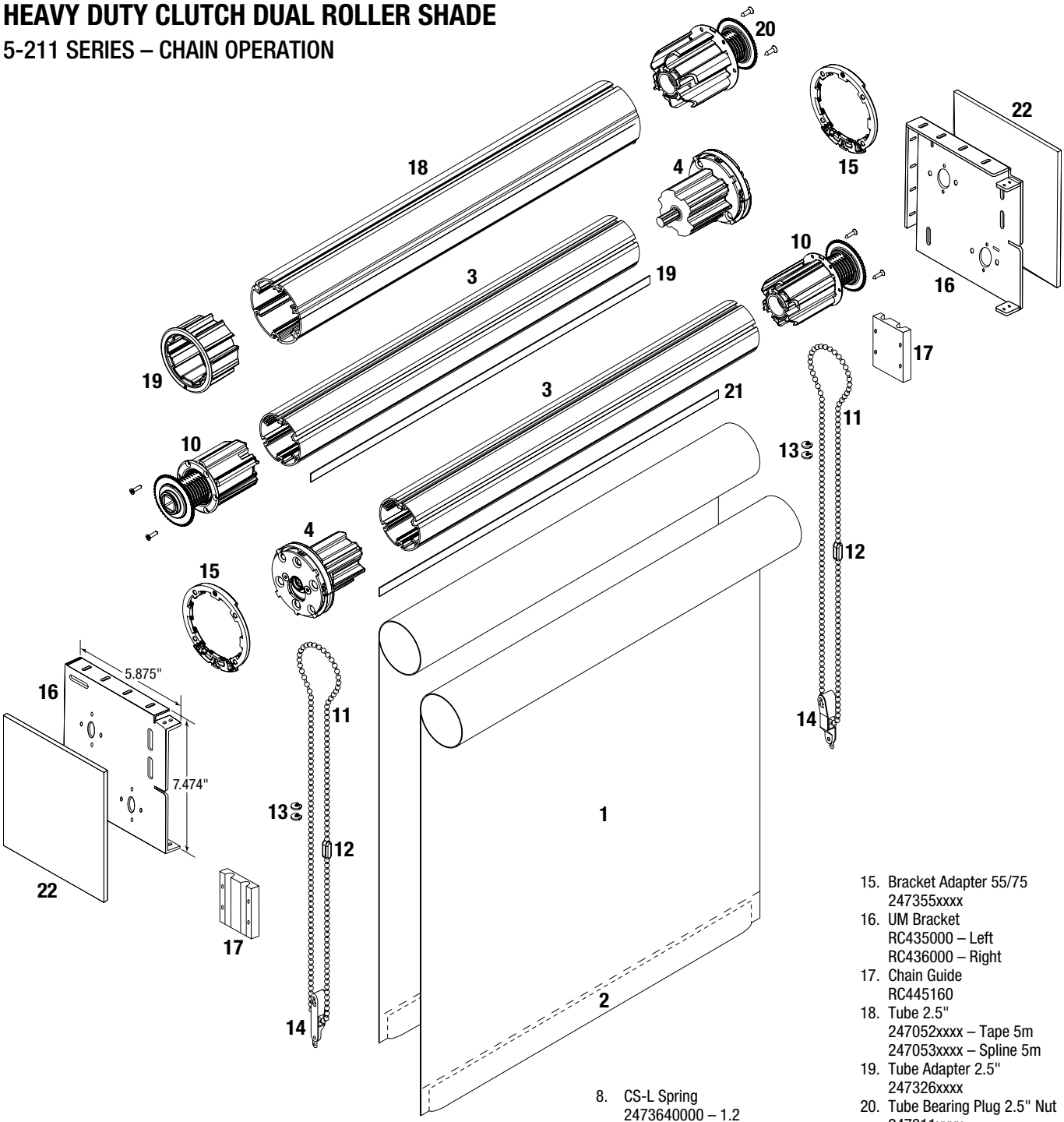

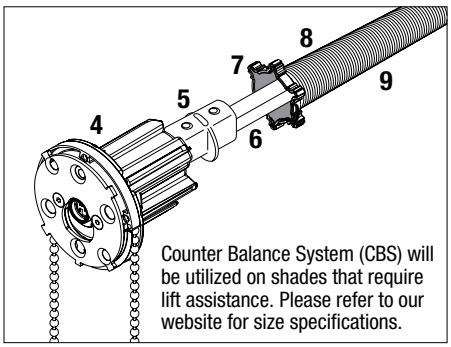

Counter Balance System (CBS) will be utilized on shades that require lift assistance. Please refer to our website for size specifications.

STANDARD COMPONENTS:

1. Fabric
2. Sealed Hembar
3. Tube 2.0"
   247060xxxx – Tape 5m
4. Clutch 1:1
   247357xxxx
5. CS-L Connector
   2473671601
6. Driving Tube Alu 12 mm
   1840497080
7. CS-L Tensioner
   2473691601
8. CS-L Spring
   2473640000 – 1.2
   2473650000 – 1.5
   2473660000 – 1.8
   2473720000 – 2.1
   2473730000 – 2.4
9. CS-L Rubber Tube (Under Spring)
   2473681858
10. Tube Bearing Plug 2.0" Nut
    247310xxxx
11. Chain .175" Stainless Steel
    2474180025
12. Chain Connector
    2474180026
13. Bead Chain Stop
    2474180027
14. Clear Plastic Chain Tensioner
    RC445401
15. Bracket Adapter 55/75
    247355xxxx
16. UM Bracket
    RC435000 – Left
    RC436000 – Right
17. Chain Guide
    RC445160
18. Tube 2.5"
    247052xxxx – Tape 5m
    247053xxxx – Spline 5m
19. Tube Adapter 2.5"
    247326xxxx
20. Tube Bearing Plug 2.5" Nut
    247311xxxx

OPTIONAL COMPONENTS:

21. Detachable Spline
    2471580000 – Flat
    2471590000 – Round
22. Bracket End Plate
    RC437000 – Anodized
    RC437048 – Black
    RC437350 – Vanilla
    RC437785 – White
    RC437864 – Bronze

xxxx = 4 digit color code. See Color Chart on page 4 for list of color codes.

HEAVY DUTY CLUTCH DUAL ROLLER SHADE WITH FASCIA

5-231 SERIES – CHAIN OPERATION

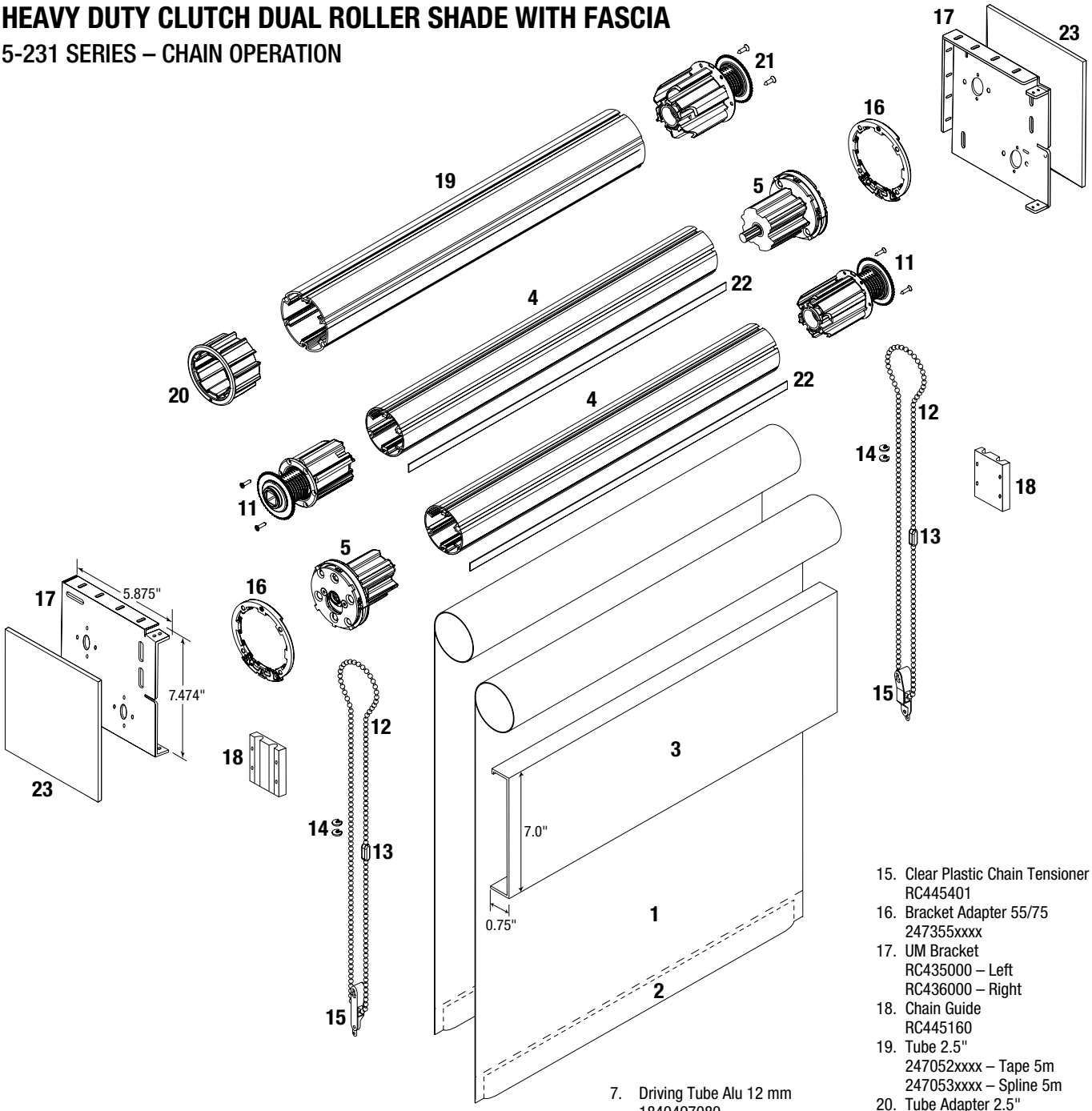

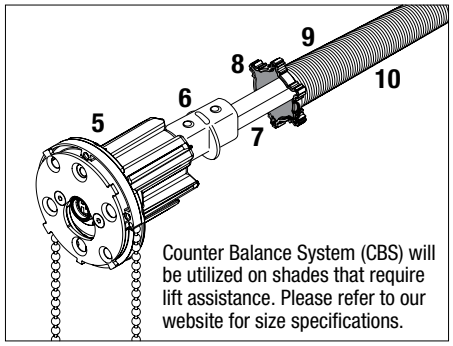

STANDARD COMPONENTS:

1. Fabric
2. Sealed Hembar
3. 7" Fascia
   RC511000 – Anodized
   RC511048 – Black
   RC511350 – Vanilla
   RC511785 – White
   RC511864 – Bronze
4. Tube 2.0"
   247060xxxx – Tape 5m
5. Clutch 1:1
   247357xxxx
6. CS-L Connector
   2473671601
7. Driving Tube Alu 12 mm
   1840497080
8. CS-L Tensioner
   2473691601
9. CS-L Spring
   2473640000 – 1.2
   2473650000 – 1.5
   2473660000 – 1.8
   2473720000 – 2.1
   2473730000 – 2.4
10. CS-L Rubber Tube (Under Spring)
    2473681858
11. Tube Bearing Plug 2.0" Nut
    247310xxxx
12. Chain .175" Stainless Steel
    2474180025
13. Chain Connector
    2474180026
14. Bead Chain Stop
    2474180027
15. Clear Plastic Chain Tensioner
    RC445401
16. Bracket Adapter 55/75
    247355xxxx
17. UM Bracket
    RC435000 – Left
    RC436000 – Right
18. Chain Guide
    RC445160
19. Tube 2.5"
    247052xxxx – Tape 5m
    247053xxxx – Spline 5m
20. Tube Adapter 2.5"
    247326xxxx
21. Tube Bearing Plug 2.5" Nut
    247311xxxx

OPTIONAL COMPONENTS:

22. Detachable Spline
    2471580000 – Flat
    2471590000 – Round
23. Bracket End Plate
    RC437000 – Anodized
    RC437048 – Black
    RC437350 – Vanilla
    RC437785 – White
    RC437864 – Bronze

xxxx = 4 digit color code. See Color Chart on page 4 for list of color codes.

HEAVY DUTY CLUTCH DUAL ROLLER SHADE WITH BLOCKOUT SYSTEM

5-251 SERIES – CHAIN OPERATION

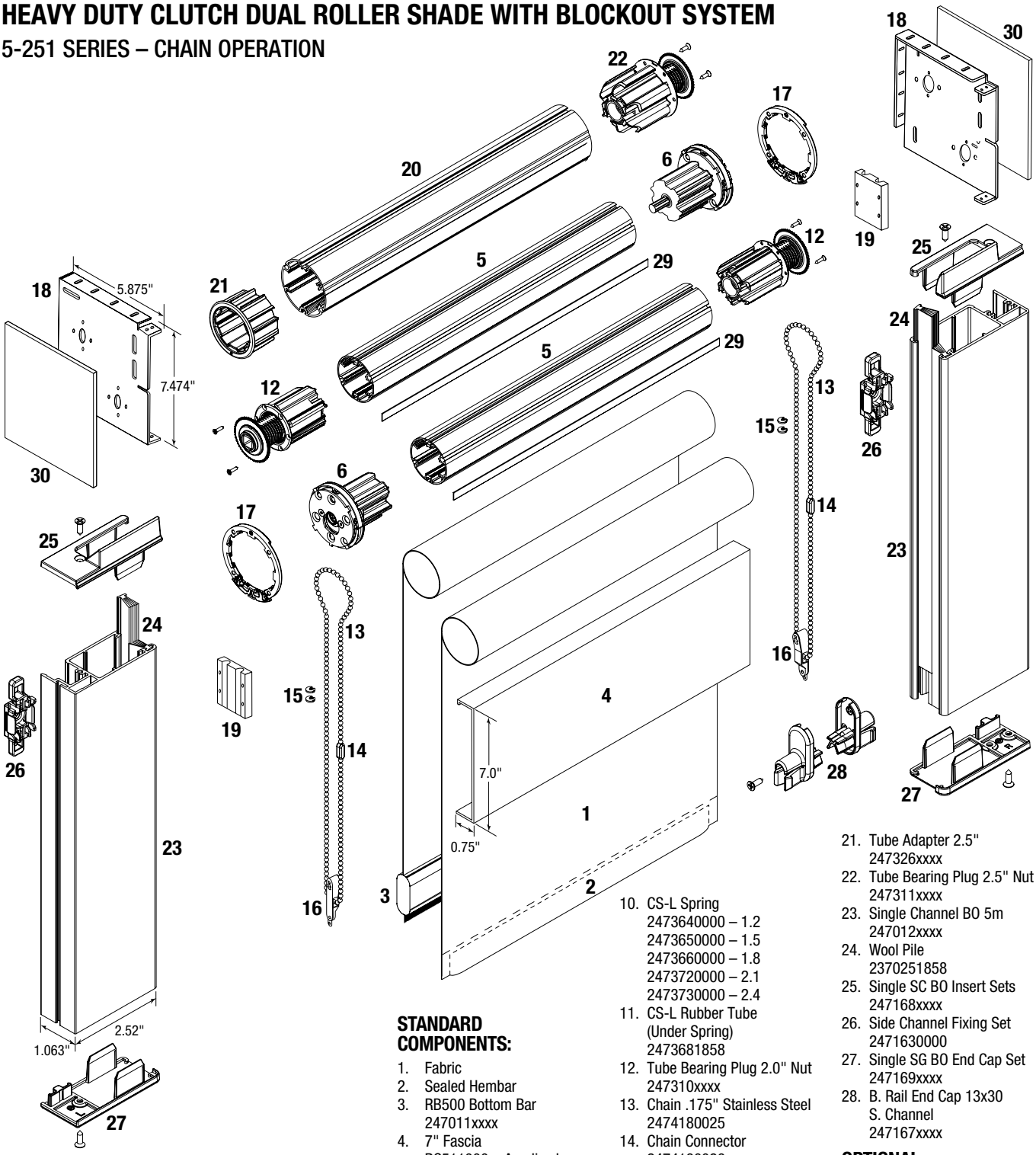

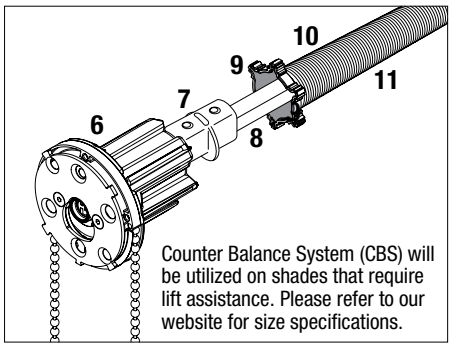

Counter Balance System (CBS) will be utilized on shades that require lift assistance. Please refer to our website for size specifications.

STANDARD COMPONENTS:

1. Fabric
2. Sealed Hembar
3. RB500 Bottom Bar
   247011xxxx
4. 7" Fascia
   RC511000 – Anodized
   RC511048 – Black
   RC511350 – Vanilla
   RC511785 – White
   RC511864 – Bronze
5. Tube 2.0"
   247060xxxx – Tape 5m
6. Clutch 1:1
   247357xxxx
7. CS-L Connector
   2473671601
8. Driving Tube Alu 12 mm
   1840497080
9. CS-L Tensioner
   2473691601
10. CS-L Spring
    2473640000 – 1.2
    2473650000 – 1.5
    2473660000 – 1.8
    2473720000 – 2.1
    2473730000 – 2.4
11. CS-L Rubber Tube (Under Spring)
    2473681858
12. Tube Bearing Plug 2.0" Nut
    247310xxxx
13. Chain .175" Stainless Steel
    2474180025
14. Chain Connector
    2474180026
15. Bead Chain Stop
    2474180027
16. Clear Plastic Chain Tensioner
    RC445401
17. Bracket Adapter 55/75
    247355xxxx
18. UM Bracket
    RC435000 – Left
    RC436000 – Right
19. Chain Guide
    RC445160
20. Tube 2.5"
    247052xxxx – Tape 5m
    247053xxxx – Spline 5m
21. Tube Adapter 2.5"
    247326xxxx
22. Tube Bearing Plug 2.5" Nut
    247311xxxx
23. Single Channel BO 5m
    247012xxxx
24. Wool Pile
    2370251858
25. Single SC BO Insert Sets
    247168xxxx
26. Side Channel Fixing Set
    2471630000
27. Single SG BO End Cap Set
    247169xxxx
28. B. Rail End Cap 13x30 S. Channel
    247167xxxx

OPTIONAL COMPONENTS:

29. Detachable Spline
    2471580000 – Flat
    2471590000 – Round
30. Bracket End Plate
    RC437000 – Anodized
    RC437048 – Black
    RC437350 – Vanilla
    RC437785 – White
    RC437864 – Bronze

xxxx = 4 digit color code. See Color Chart on page 4 for list of color codes.

HEAVY DUTY CLUTCH DUAL ROLLER SHADE WITH EXTRUDED POCKET

5-211 SERIES – CHAIN OPERATION

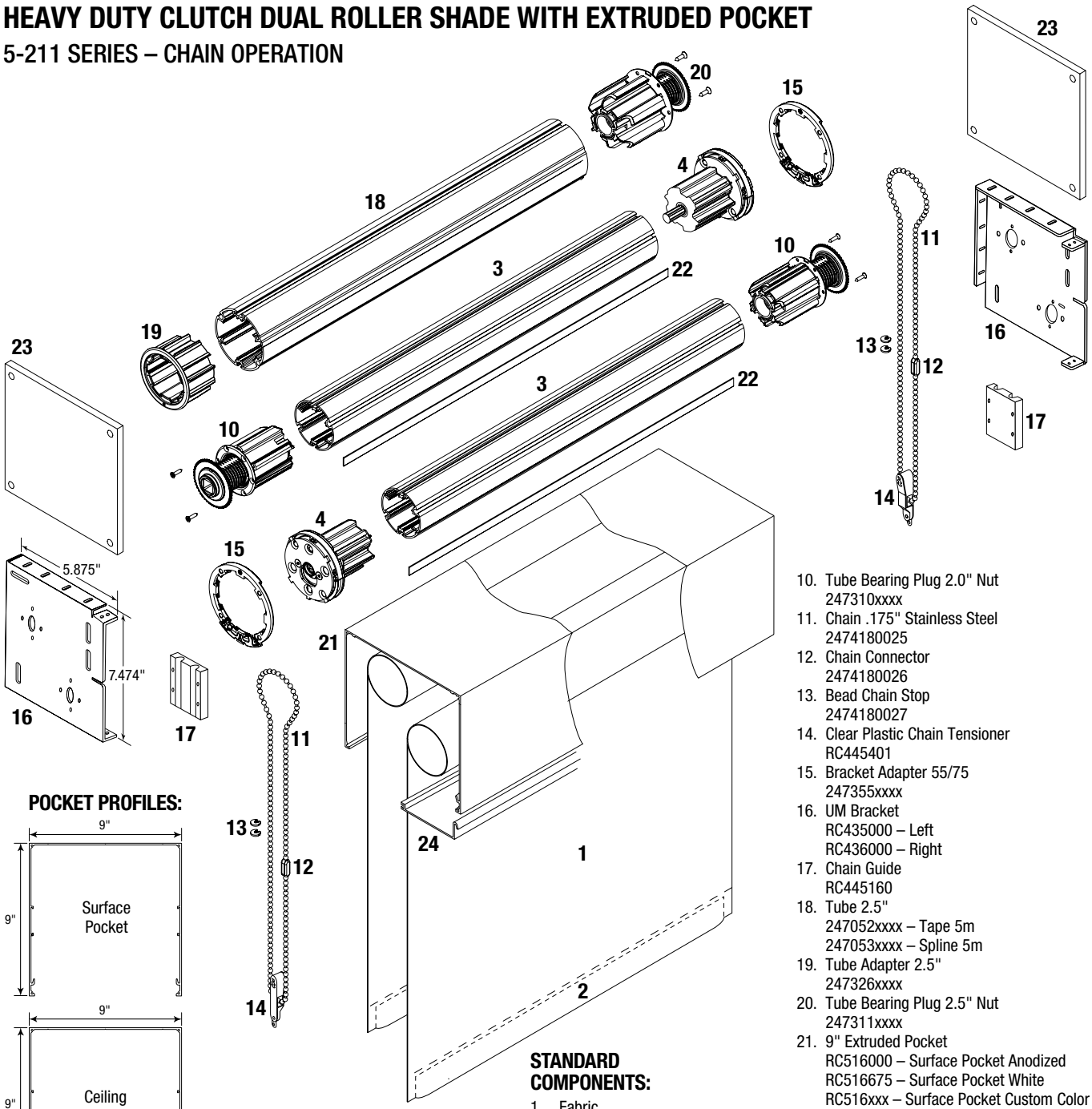

POCKET PROFILES:

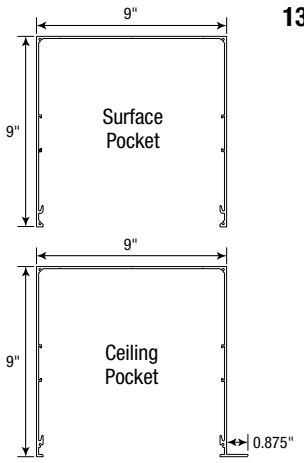

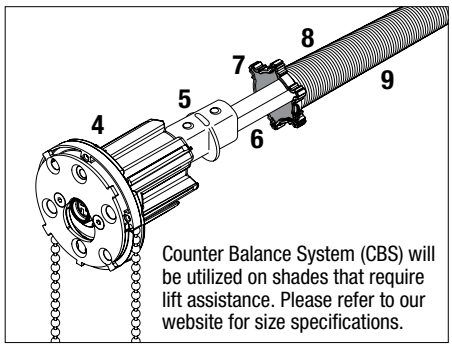

Counter Balance System (CBS) will be utilized on shades that require lift assistance. Please refer to our website for size specifications.

STANDARD COMPONENTS:

1. Fabric
2. Sealed Hembar
3. Tube 2.0"
   247060xxxx – Tape 5m
4. Clutch 1:1
   247357xxxx
5. CS-L Connector
   2473671601
6. Driving Tube Alu 12 mm
   1840497080
7. CS-L Tensioner
   2473691601
8. CS-L Spring
   2473640000 – 1.2
   2473650000 – 1.5
   2473660000 – 1.8
   2473720000 – 2.1
   2473730000 – 2.4
9. CS-L Rubber Tube (Under Spring)
   2473681858
10. Tube Bearing Plug 2.0" Nut
    247310xxxx
11. Chain .175" Stainless Steel
    2474180025
12. Chain Connector
    2474180026
13. Bead Chain Stop
    2474180027
14. Clear Plastic Chain Tensioner
    RC445401
15. Bracket Adapter 55/75
    247355xxxx
16. UM Bracket
    RC435000 – Left
    RC436000 – Right
17. Chain Guide
    RC445160
18. Tube 2.5"
    247052xxxx – Tape 5m
    247053xxxx – Spline 5m
19. Tube Adapter 2.5"
    247326xxxx
20. Tube Bearing Plug 2.5" Nut
    247311xxxx
21. 9" Extruded Pocket
    RC516000 – Surface Pocket Anodized
    RC516675 – Surface Pocket White
    RC516xxx – Surface Pocket Custom Color
    RC517000 – Ceiling Pocket Anodized
    RC517675 – Ceiling Pocket White
    RC517xxx – Ceiling Pocket Custom Color
22. 5" Pocket Bottom Closure
    RC504000 – Anodized
    RC504675 – White

OPTIONAL COMPONENTS:

23. 9" Pocket End Cap
    RC518000 – Anodized
    RC518675 – White
    RC518xxx – Custom Color
24. Detachable Spline
    2471580000 – Flat
    2471590000 – Round

xxxx = 4 digit color code. See Color Chart on page 4 for list of color codes.

HEAVY DUTY CLUTCH SYSTEM DUAL COUPLED

5-219 SERIES – COUPLED UNIT

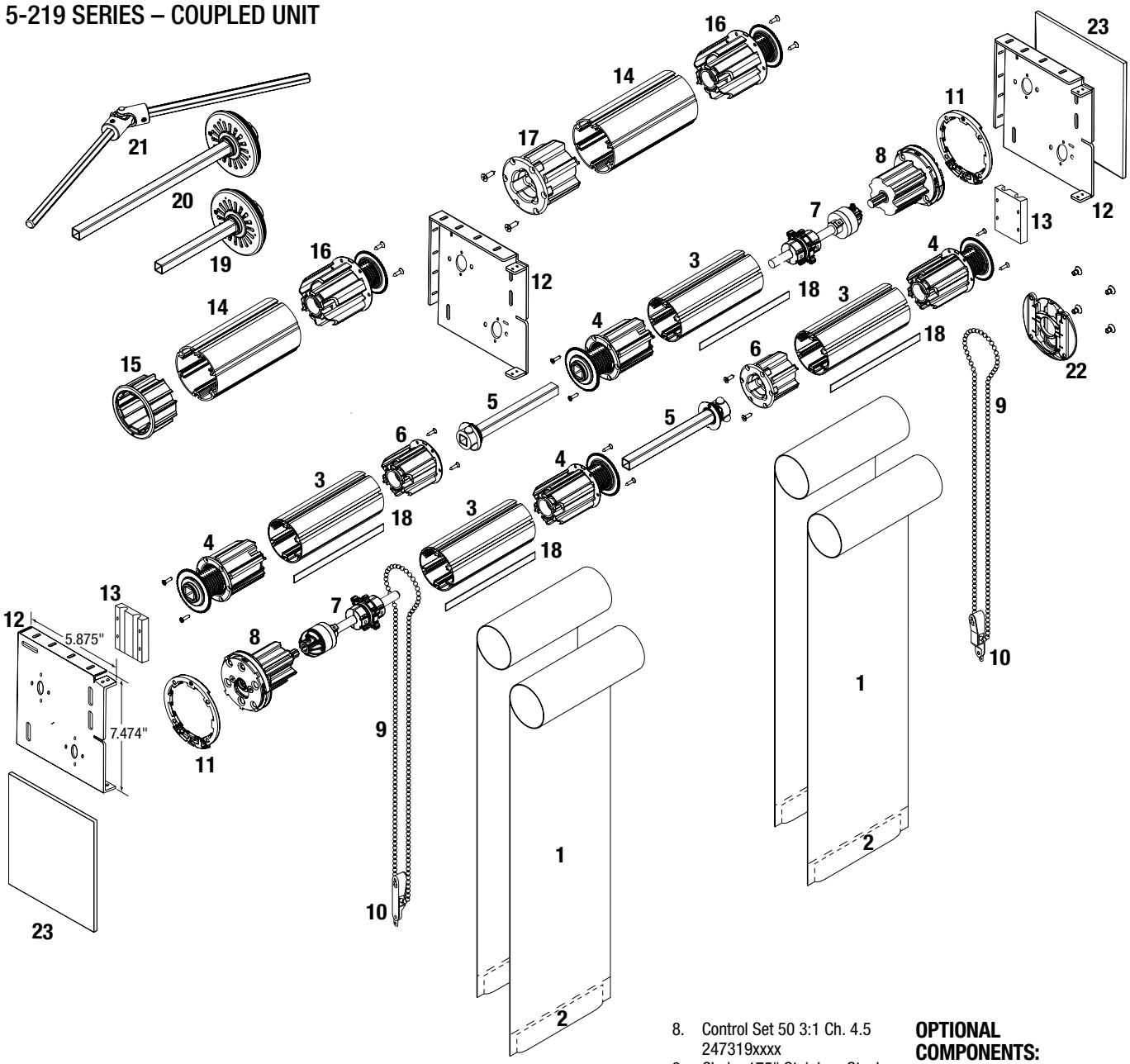

STANDARD COMPONENTS:

1. Fabric
2. Sealed Hembar
3. Tube 2.0"
   247060xxxx – Tape 5m
4. Tube Bearing Plug 50 Nut
   247310xxxx
5. Connector Set 50 5.90"
   247322xxxx
6. Tube Plug Connector
   247315xxxx – 50-15
   247317xxxx – 50
7. Auto Stop 2.0"/2.5"
   2473281601
8. Control Set 50 3:1 Ch. 4.5
   247319xxxx
9. Chain .175" Stainless Steel
   2474180025
10. Clear Plastic Chain Tensioner
    RC445401
11. Bracket Adapter 55/75
    247355xxxx
12. UM Bracket
    RC435000 – Left
    RC436000 – Right
13 Chain Guide
   RC445160
14. Tube 2.5"
    247052xxxx – Tape 5m
    247053xxxx – Spline 5m
15. Tube Adapter 2.5"
    247326xxxx
16. Tube Bearing Plug 2.5" Nut
    247311xxxx
17. Tube Plug Connector
    247316xxxx – 62-15
    247318xxxx – 62

OPTIONAL COMPONENTS:

18. Detachable Spline
    2471580000 – Flat
    2471590000 – Round
19. Aligner Set 50 5.9"
    247323xxxx
20. Aligner Set 50 11.81"
    247329xxxx
21. Joint 45° L
    2473210000
22. Leveler 2.0"
    247344xxxx
23. Bracket End Plate
    RC437000 – Anodized
    RC437048 – Black
    RC437350 – Vanilla
    RC437785 – White
    RC437864 – Bronze

xxxx = 4 digit color code. See Color Chart on page 4 for list of color codes.

HEAVY DUTY CLUTCH SYSTEM DUAL COUPLED ROLLER SHADE WITH FASCIA

5-219 SERIES – COUPLED UNIT

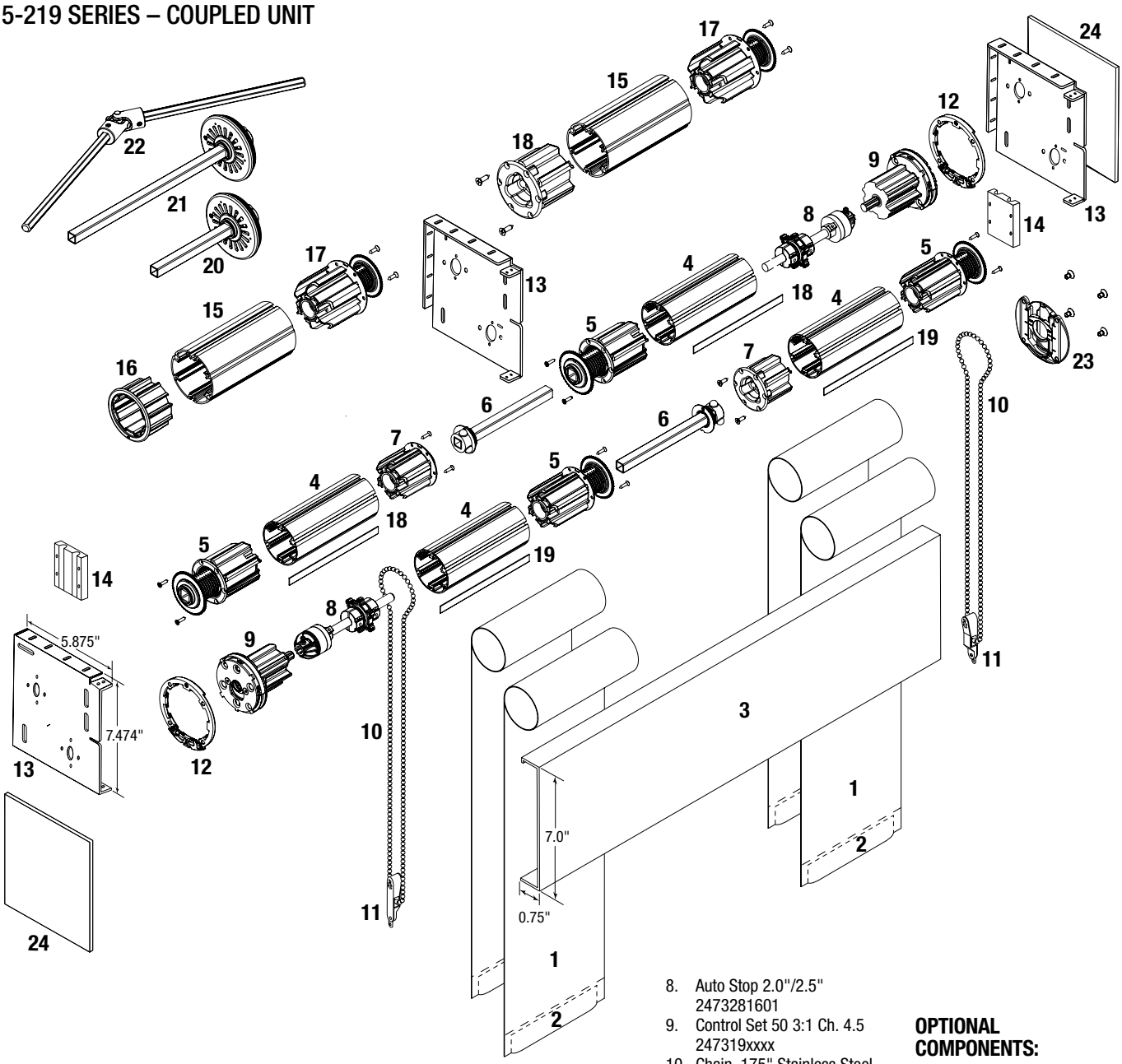

STANDARD COMPONENTS:

1. Fabric
2. Sealed Hembar
3. 7" Fascia
   RC511000 – Anodized
   RC511048 – Black
   RC511350 – Vanilla
   RC511785 – White
   RC511864 – Bronze
4. Tube 2.0"
   247060xxxx – Tape 5m
5. Tube Bearing Plug 50 Nut
   247310xxxx
6. Connector Set 50 5.90"
   247322xxxx
7. Tube Plug Connector
   247315xxxx – 50-15
   247317xxxx – 50
8. Auto Stop 2.0"/2.5"
   2473281601
9. Control Set 50 3:1 Ch. 4.5
   247319xxxx
10. Chain .175" Stainless Steel
    2474180025
11. Clear Plastic Chain Tensioner
    RC445401
12. Bracket Adapter 55/75
    247355xxxx
13. UM Bracket
    RC435000 – Left
    RC436000 – Right
14. Chain Guide
    RC445160
15. Tube 2.5"
    247052xxxx – Tape 5m
    247053xxxx – Spline 5m
16. Tube Adapter 2.5"
    247326xxxx
17. Tube Bearing Plug 2.5" Nut
    247311xxxx
18. Tube Plug Connector
    247316xxxx – 62-15
    247318xxxx – 62

OPTIONAL COMPONENTS:

19. Detachable Spline
    2471580000 – Flat
    2471590000 – Round
20. Aligner Set 50 5.9"
    247323xxxx
21. Aligner Set 50 11.81"
    247329xxxx
22. Joint 45° L
    2473210000
23. Leveler 2.0"
    247344xxxx
24. Bracket End Plate
    RC437000 – Anodized
    RC437048 – Black
    RC437350 – Vanilla
    RC437785 – White
    RC437864 – Bronze

xxxx = 4 digit color code. See Color Chart on page 4 for list of color codes.

HEAVY DUTY CLUTCH DUAL COUPLED ROLLER SHADE WITH BLOCKOUT SYSTEM

5-259 SERIES – COUPLED UNIT

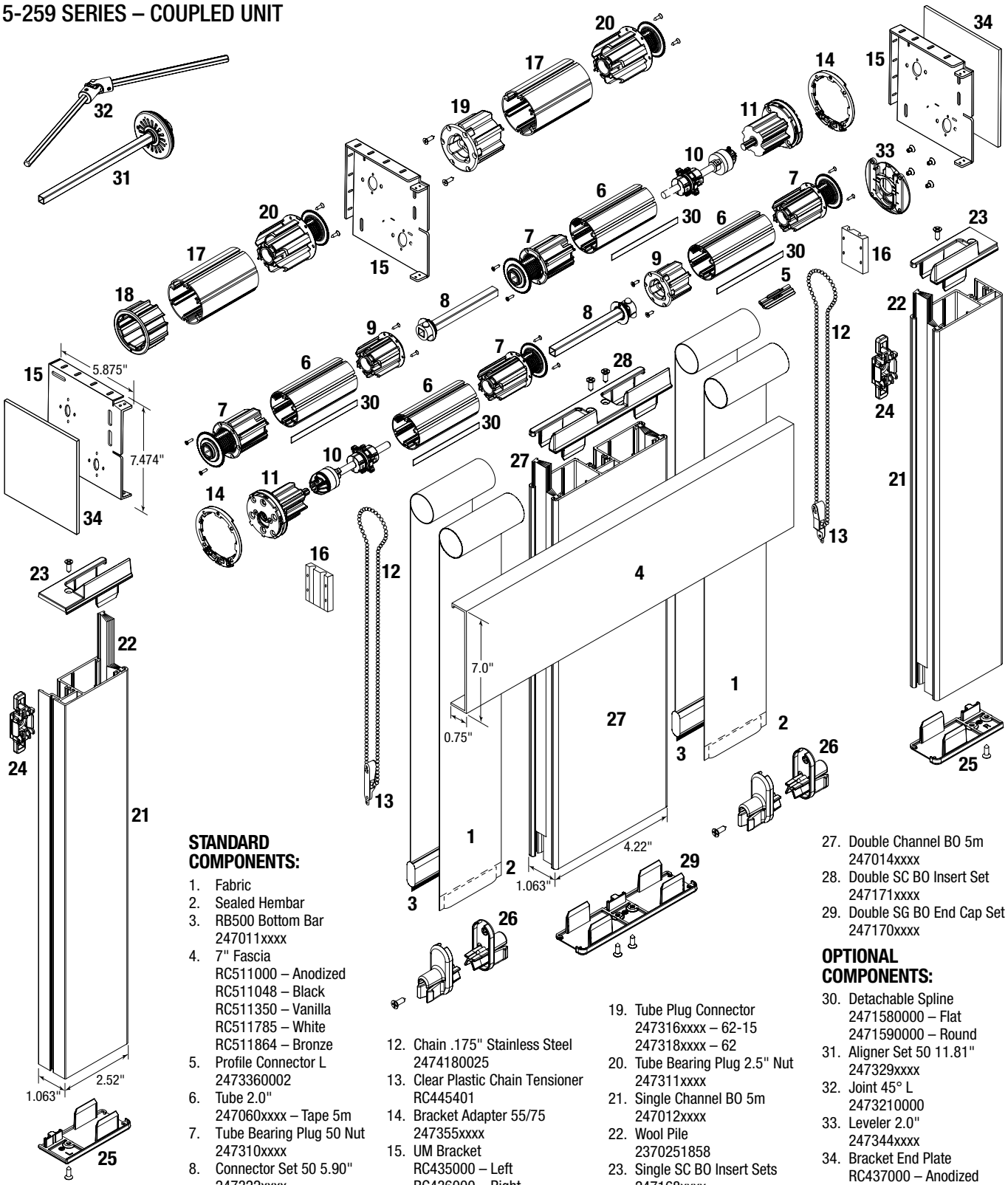

STANDARD COMPONENTS:

1. Fabric
2. Sealed Hembar
3. RB500 Bottom Bar
   247011xxxx
4. 7" Fascia
   RC511000 – Anodized
   RC511048 – Black
   RC511350 – Vanilla
   RC511785 – White
   RC511864 – Bronze
5. Profile Connector L
   2473360002
6. Tube 2.0"
   247060xxxx – Tape 5m
7. Tube Bearing Plug 50 Nut
   247310xxxx
8. Connector Set 50 5.90"
   247322xxxx
9. Tube Plug Connector
   247315xxxx – 50-15
   247317xxxx – 50
10. Auto Stop 2.0"/2.5"
    2473281601
11. Control Set 50 3:1 Ch. 4.5
    247319xxxx
12. Chain .175" Stainless Steel
    2474180025
13. Clear Plastic Chain Tensioner
    RC445401
14. Bracket Adapter 55/75
    247355xxxx
15. UM Bracket
    RC435000 – Left
    RC436000 – Right
16. Chain Guide
    RC445160
17. Tube 2.5"
    247052xxxx – Tape 5m
    247053xxxx – Spline 5m
18. Tube Adapter 2.5"
    247326xxxx
19. Tube Plug Connector
    247316xxxx – 62-15
    247318xxxx – 62
20. Tube Bearing Plug 2.5" Nut
    247311xxxx
21. Single Channel BO 5m
    247012xxxx
22. Wool Pile
    2370251858
23. Single SC BO Insert Sets
    247168xxxx
24. Side Channel Fixing Set
    2471630000
25. Single SG BO End Cap Set
    247169xxxx
26. B. Rail End Cap 13x30
    S. Channel
    247167xxxx
27. Double Channel BO 5m
    247014xxxx
28. Double SC BO Insert Set
    247171xxxx
29. Double SG BO End Cap Set
    247170xxxx

OPTIONAL COMPONENTS:

30. Detachable Spline
    2471580000 – Flat
    2471590000 – Round
31. Aligner Set 50 11.81"
    247329xxxx
32. Joint 45° L
    2473210000
33. Leveler 2.0"
    247344xxxx
34. Bracket End Plate
    RC437000 – Anodized
    RC437048 – Black
    RC437350 – Vanilla
    RC437785 – White
    RC437864 – Bronze

xxxx = 4 digit color code. See Color Chart on page 4 for list of color codes.

HEAVY DUTY CRANK OPERATED

5-215 SERIES – CRANK OPERATION

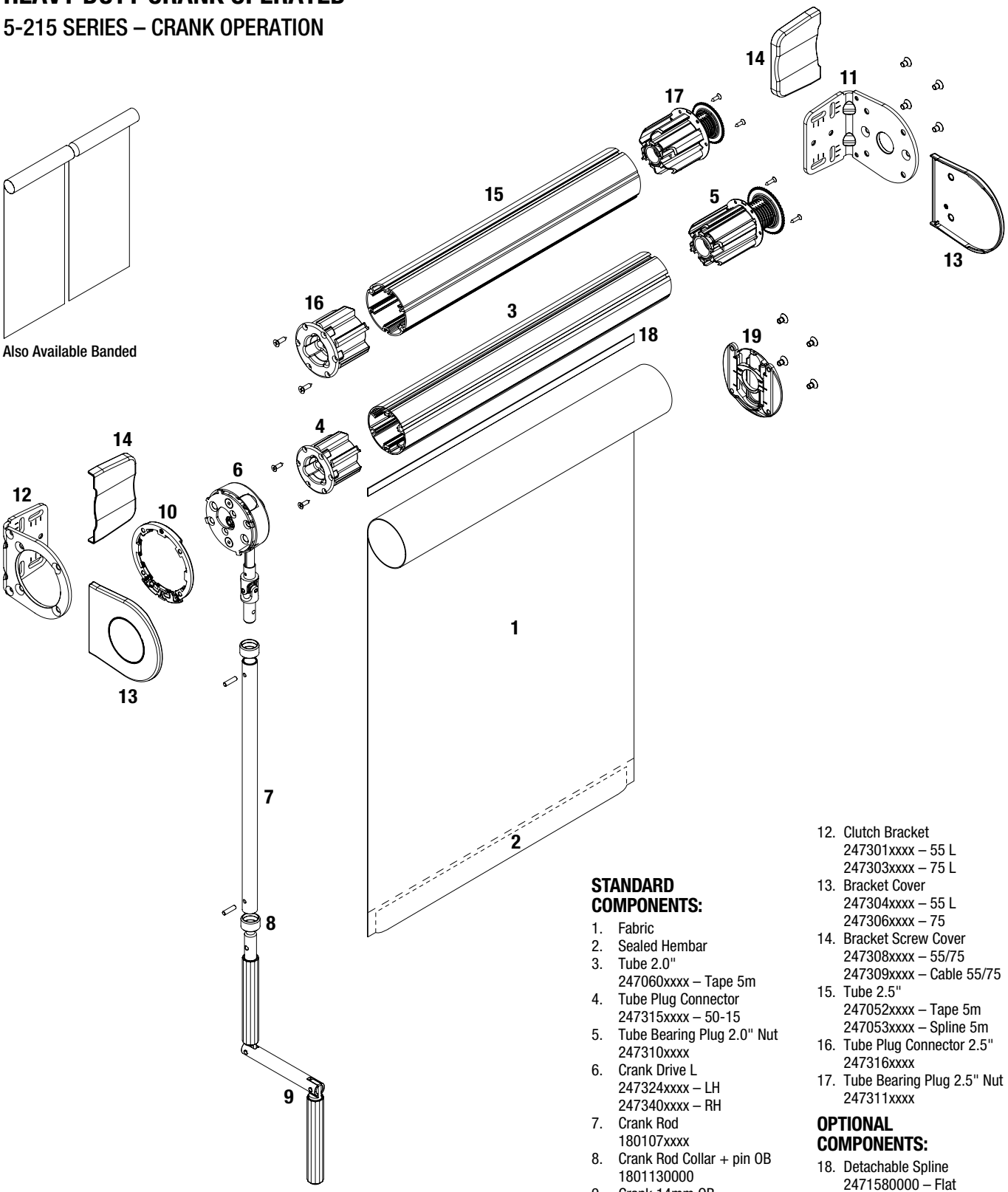

STANDARD COMPONENTS:

1. Fabric
2. Sealed Hembar
3. Tube 2.0"
   247060xxxx – Tape 5m
4. Tube Plug Connector
   247315xxxx – 50-15
5. Tube Bearing Plug 2.0" Nut
   247310xxxx
6. Crank Drive L
   247324xxxx – LH
   247340xxxx – RH
7. Crank Rod
   180107xxxx
8. Crank Rod Collar + pin OB
   1801130000
9. Crank 14mm OB
   1801010000
10. Bracket Adapter 55/75
    247355xxxx
11. Plug Bracket
    247300 – 55 L
    247302 – 75 L
12. Clutch Bracket
    247301xxxx – 55 L
    247303xxxx – 75 L
13. Bracket Cover
    247304xxxx – 55 L
    247306xxxx – 75
14. Bracket Screw Cover
    247308xxxx – 55/75
    247309xxxx – Cable 55/75
15. Tube 2.5"
    247052xxxx – Tape 5m
    247053xxxx – Spline 5m
16. Tube Plug Connector 2.5"
    247316xxxx
17. Tube Bearing Plug 2.5" Nut
    247311xxxx

OPTIONAL COMPONENTS:

18. Detachable Spline
    2471580000 – Flat
    2471590000 – Round
19. Leveler 2.0"
    247344xxxx

xxxx = 4 digit color code. See Color Chart on page 4 for list of color codes.

HEAVY DUTY CRANK OPERATED WITH FASCIA

5-235 SERIES – CRANK OPERATION

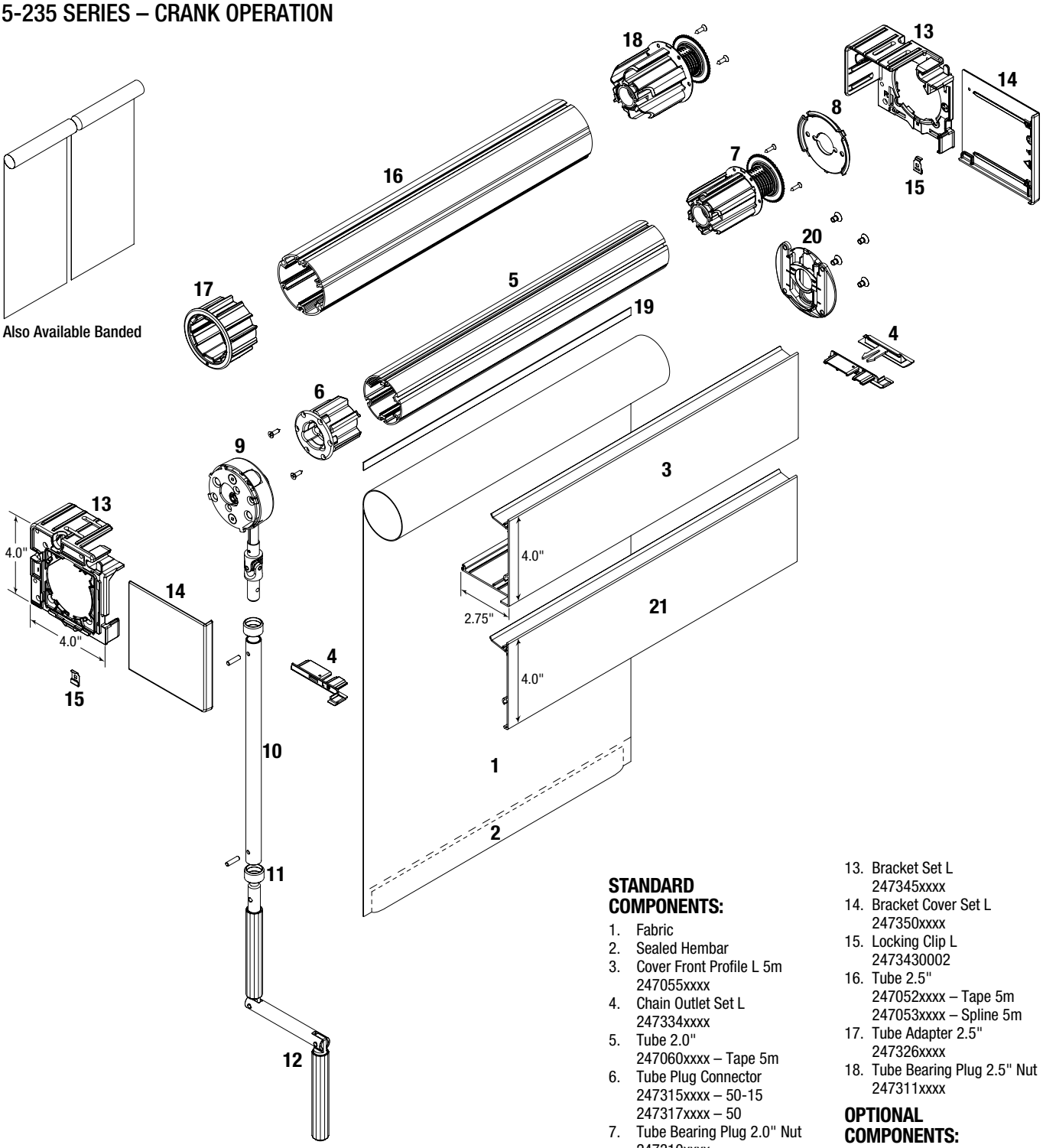

STANDARD COMPONENTS:

1. Fabric
2. Sealed Hembar
3. Cover Front Profile L 5m
   247055xxxx
4. Chain Outlet Set L
   247334xxxx
5. Tube 2.0"
   247060xxxx – Tape 5m
6. Tube Plug Connector
   247315xxxx – 50-15
   247317xxxx – 50
7. Tube Bearing Plug 2.0" Nut
   247310xxxx
8. Plate L No.2
   2473480003
9. Crank Drive L
   247324xxxx – LH
   247340xxxx – RH
10. Crank Rod
    180107xxxx
11. Crank Rod Collar + pin OB
    1801130000
12. Crank 0.55" OB
    1801010000
13. Bracket Set L
    247345xxxx
14. Bracket Cover Set L
    247350xxxx
15. Locking Clip L
    2473430002
16. Tube 2.5"
    247052xxxx – Tape 5m
    247053xxxx – Spline 5m
17. Tube Adapter 2.5"
    247326xxxx
18. Tube Bearing Plug 2.5" Nut
    247311xxxx

OPTIONAL COMPONENTS:

19. Detachable Spline
    2471580000 – Flat
    2471590000 – Round
20. Leveler 2.0"
    247344xxxx
21. Reverse Roll Cover Profile L 5m
    247058xxxx

xxxx = 4 digit color code. See Color Chart on page 4 for list of color codes.

HEAVY DUTY CRANK OPERATED WITH BLOCKOUT SYSTEM

5-255 SERIES – CRANK OPERATION

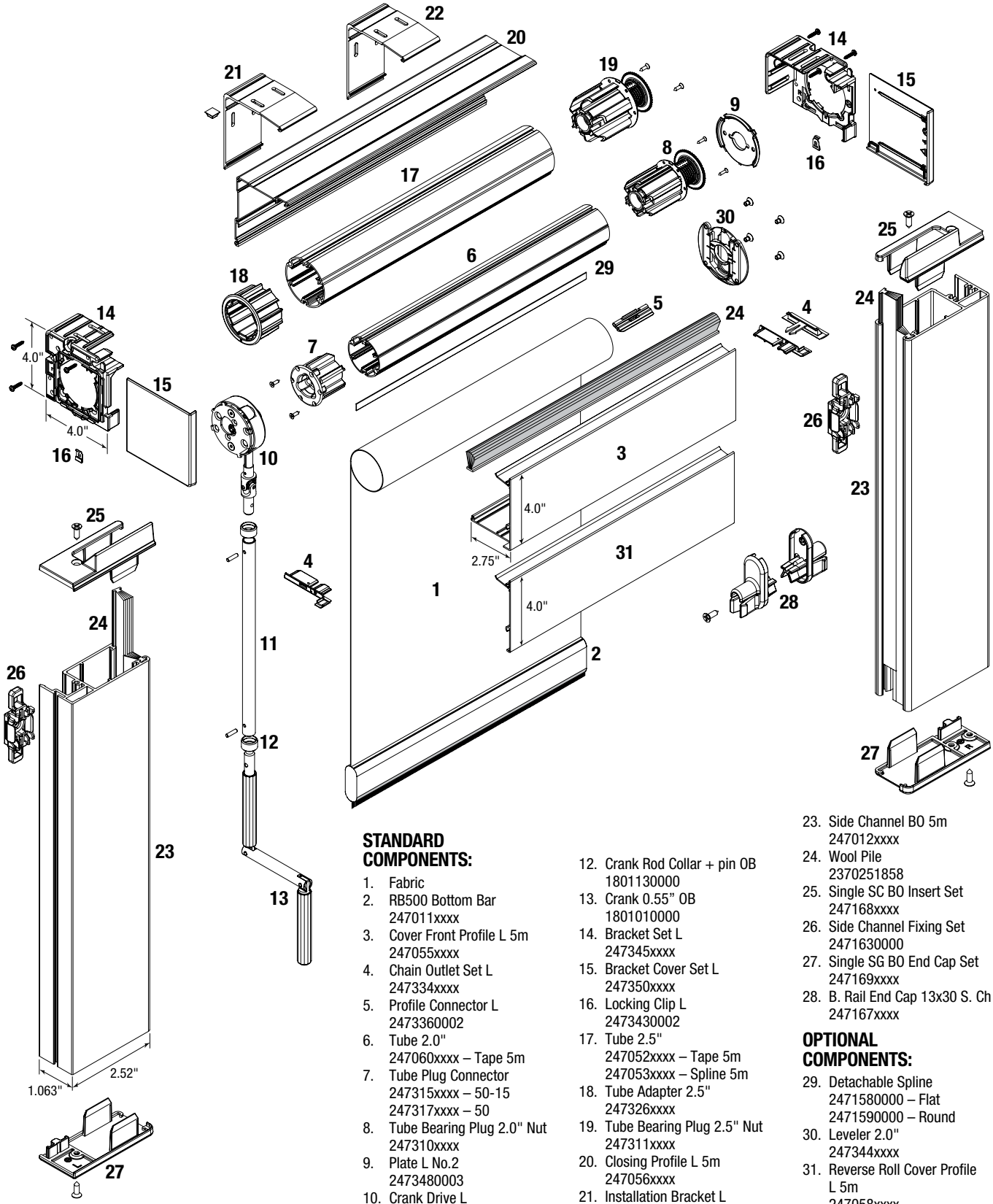

Note: End Mount Installations will not receive a Bracket Cover Set and must be specified when ordering.

STANDARD COMPONENTS:

1. Fabric
2. RB500 Bottom Bar
   247011xxxx
3. Cover Front Profile L 5m
   247055xxxx
4. Chain Outlet Set L
   247334xxxx
5. Profile Connector L
   2473360002
6. Tube 2.0"
   247060xxxx – Tape 5m
7. Tube Plug Connector
   247315xxxx – 50-15
   247317xxxx – 50
8. Tube Bearing Plug 2.0" Nut
   247310xxxx
9. Plate L No.2
   2473480003
10. Crank Drive L
    247324xxxx – LH
    247340xxxx – RH
11. Crank Rod
    180107xxxx
12. Crank Rod Collar + pin OB
    1801130000
13. Crank 0.55" OB
    1801010000
14. Bracket Set L
    247345xxxx
15. Bracket Cover Set L
    247350xxxx
16. Locking Clip L
    2473430002
17. Tube 2.5"
    247052xxxx – Tape 5m
    247053xxxx – Spline 5m
18. Tube Adapter 2.5"
    247326xxxx
19. Tube Bearing Plug 2.5" Nut
    247311xxxx
20. Closing Profile L 5m
    247056xxxx
21. Installation Bracket L
    Unfinished
    2473420000
22. Installation Bracket L
    247341xxxx
23. Side Channel BO 5m
    247012xxxx
24. Wool Pile
    2370251858
25. Single SC BO Insert Set
    247168xxxx
26. Side Channel Fixing Set
    2471630000
27. Single SG BO End Cap Set
    247169xxxx
28. B. Rail End Cap 13x30 S. Ch
    247167xxxx

OPTIONAL COMPONENTS:

29. Detachable Spline
    2471580000 – Flat
    2471590000 – Round
30. Leveler 2.0"
    247344xxxx
31. Reverse Roll Cover Profile L 5m
    247058xxxx

xxxx = 4 digit color code. See Color Chart on page 4 for list of color codes.

HEAVY DUTY CRANK COUPLED

5-215 SERIES – CRANK OPERATION

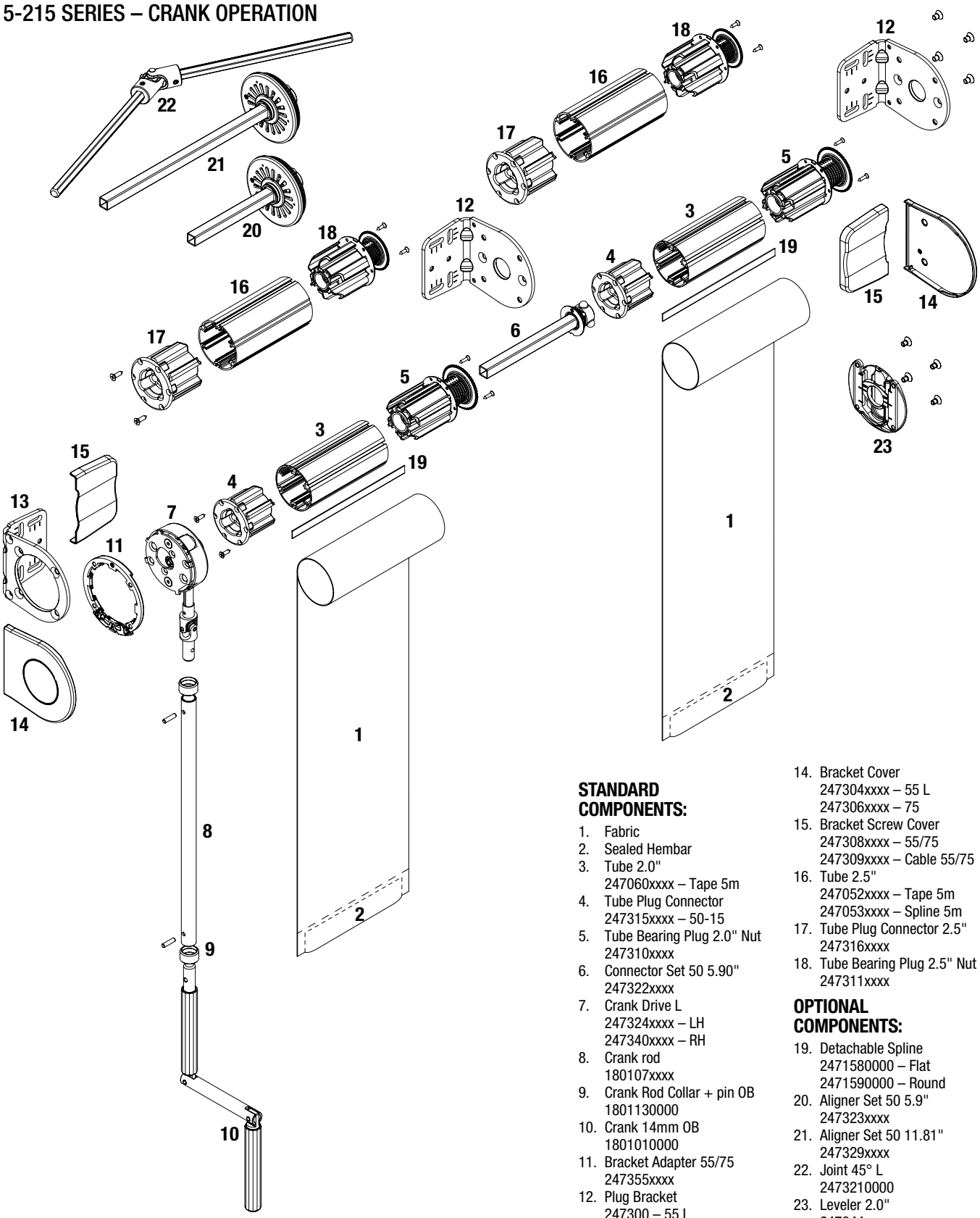

STANDARD COMPONENTS:

1. Fabric
2. Sealed Hembar
3. Tube 2.0"
   247060xxxx – Tape 5m
4. Tube Plug Connector
   247315xxxx – 50-15
5. Tube Bearing Plug 2.0" Nut
   247310xxxx
6. Connector Set 50 5.90"
   247322xxxx
7. Crank Drive L
   247324xxxx – LH
   247340xxxx – RH
8. Crank rod
   180107xxxx
9. Crank Rod Collar + pin OB
   1801130000
10. Crank 14mm OB
    1801010000
11. Bracket Adapter 55/75
    247355xxxx
12. Plug Bracket
    247300 – 55 L
    247302 – 75 L
13. Clutch Bracket
    247301xxxx – 55 L
    247303xxxx – 75 L
14. Bracket Cover
    247304xxxx – 55 L
    247306xxxx – 75
15. Bracket Screw Cover
    247308xxxx – 55/75
    247309xxxx – Cable 55/75
16. Tube 2.5"
    247052xxxx – Tape 5m
    247053xxxx – Spline 5m
17. Tube Plug Connector 2.5"
    247316xxxx
18. Tube Bearing Plug 2.5" Nut
    247311xxxx

OPTIONAL COMPONENTS:

19. Detachable Spline
    2471580000 – Flat
    2471590000 – Round
20. Aligner Set 50 5.9"
    247323xxxx
21. Aligner Set 50 11.81"
    247329xxxx
22. Joint 45° L
    2473210000
23. Leveler 2.0"
    247344xxxx

xxxx = 4 digit color code. See Color Chart on page 4 for list of color codes.

HEAVY DUTY CRANK OPERATED COUPLED SHADE WITH FASCIA

5-235 SERIES – CRANK OPERATION

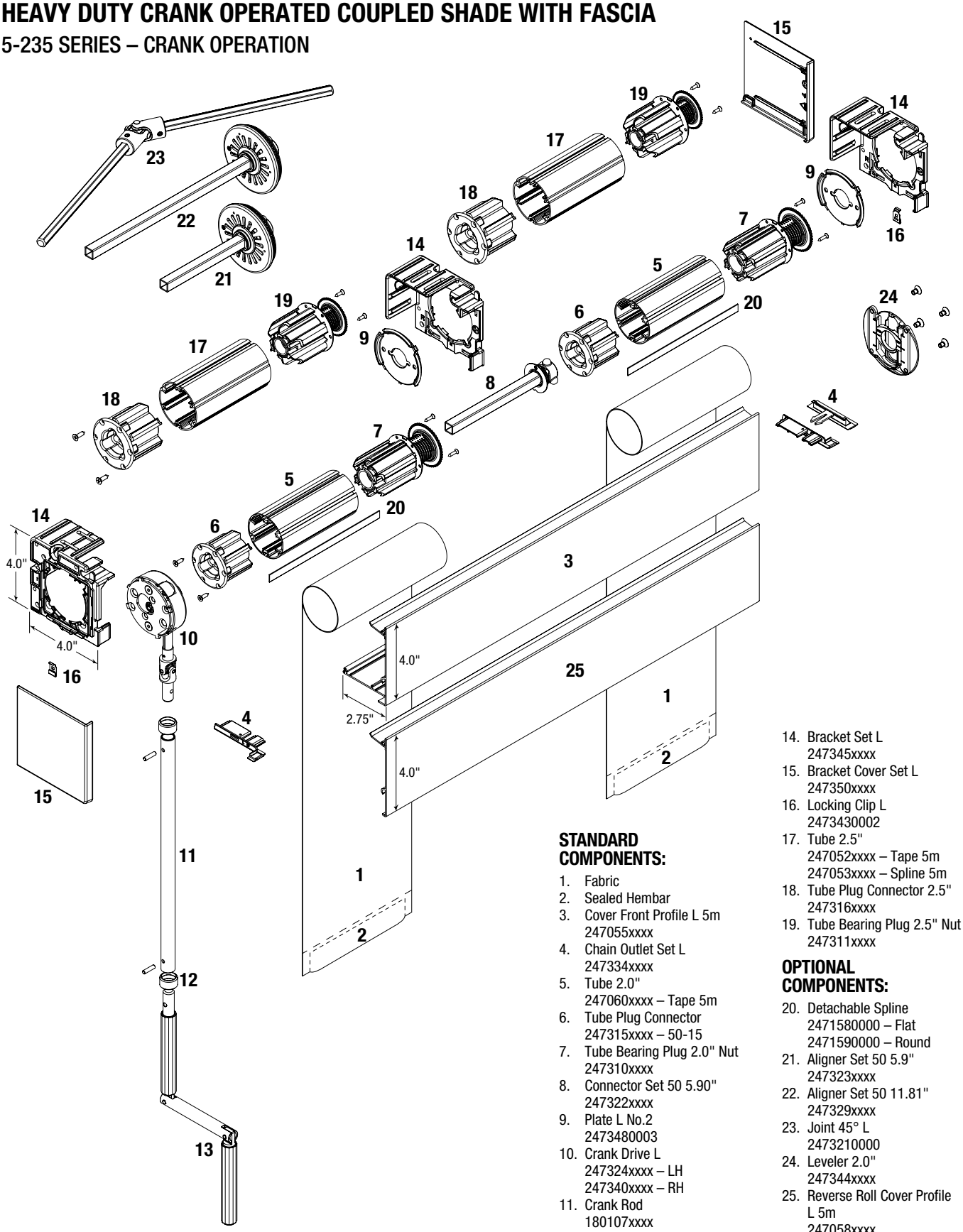

Note: End Mount Installations will not receive a Bracket Cover Set and must be specified when ordering.

STANDARD COMPONENTS:

1. Fabric
2. Sealed Hembar
3. Cover Front Profile L 5m
   247055xxxx
4. Chain Outlet Set L
   247334xxxx
5. Tube 2.0"
   247060xxxx – Tape 5m
6. Tube Plug Connector
   247315xxxx – 50-15
7. Tube Bearing Plug 2.0" Nut
   247310xxxx
8. Connector Set 50 5.90"
   247322xxxx
9. Plate L No.2
   2473480003
10. Crank Drive L
    247324xxxx – LH
    247340xxxx – RH
11. Crank Rod
    180107xxxx
12. Crank Rod Collar + pin OB
    1801130000
13. Crank 0.55" OB
    1801010000
14. Bracket Set L
    247345xxxx
15. Bracket Cover Set L
    247350xxxx
16. Locking Clip L
    2473430002
17. Tube 2.5"
    247052xxxx – Tape 5m
    247053xxxx – Spline 5m
18. Tube Plug Connector 2.5"
    247316xxxx
19. Tube Bearing Plug 2.5" Nut
    247311xxxx

OPTIONAL COMPONENTS:

20. Detachable Spline
    2471580000 – Flat
    2471590000 – Round
21. Aligner Set 50 5.9"
    247323xxxx
22. Aligner Set 50 11.81"
    247329xxxx
23. Joint 45° L
    2473210000
24. Leveler 2.0"
    247344xxxx
25. Reverse Roll Cover Profile L 5m
    247058xxxx

xxxx = 4 digit color code. See Color Chart on page 4 for list of color codes.

HEAVY DUTY CRANK OPERATED COUPLED SHADE WITH BLOCKOUT SYSTEM

5-255 SERIES – CRANK OPERATION

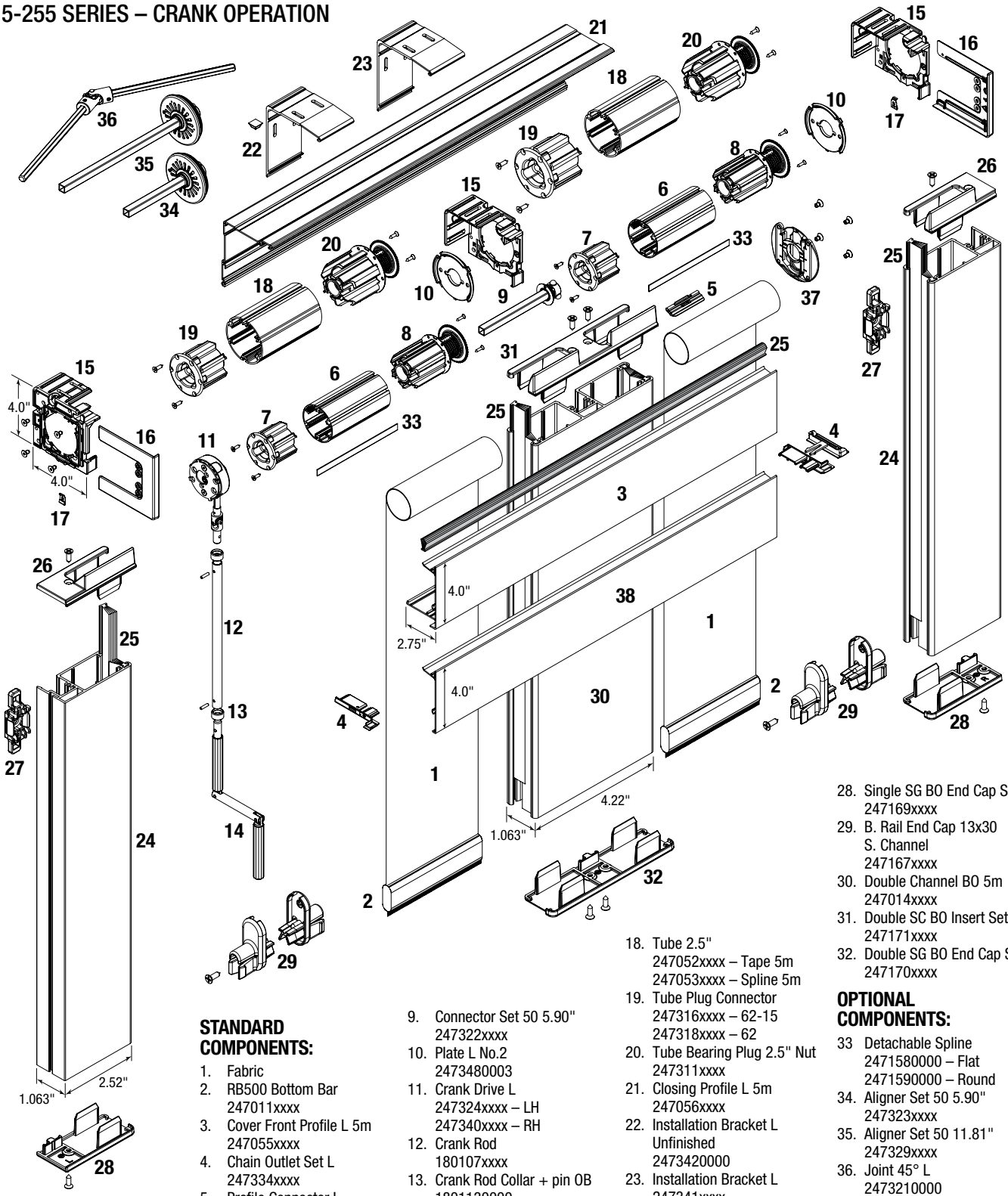

Note: End Mount Installations will not receive a Bracket Cover Set and must be specified when ordering.

STANDARD COMPONENTS:

1. Fabric
2. RB500 Bottom Bar 247011xxxx
3. Cover Front Profile L 5m 247055xxxx
4. Chain Outlet Set L 247334xxxx
5. Profile Connector L 2473360002
6. Tube 2.0" 247060xxxx – Tape 5m
7. Tube Plug Connector 247315xxxx – 50-15 247317xxxx – 50
8. Tube Bearing Plug 2.0" Nut 247310xxxx
9. Connector Set 50 5.90" 247322xxxx
10. Plate L No.2 2473480003
11. Crank Drive L 247324xxxx – LH 247340xxxx – RH
12. Crank Rod 180107xxxx
13. Crank Rod Collar + pin OB 1801130000
14. Crank 0.55" OB 1801010000
15. Bracket Set L 247345xxxx
16. Bracket Cover Set L Coupled 247331xxxx
17. Locking Clip L 2473430002
18. Tube 2.5" 247052xxxx – Tape 5m 247053xxxx – Spline 5m
19. Tube Plug Connector 247316xxxx – 62-15 247318xxxx – 62
20. Tube Bearing Plug 2.5" Nut 247311xxxx
21. Closing Profile L 5m 247056xxxx
22. Installation Bracket L Unfinished 2473420000
23. Installation Bracket L 247341xxxx
24. Single Channel BO 5m 247012xxxx
25. Wool Pile 2370251858
26. Single SC BO Insert Sets 247168xxxx
27. Side Channel Fixing Set 2471630000
28. Single SG BO End Cap Set 247169xxxx
29. B. Rail End Cap 13x30 S. Channel 247167xxxx
30. Double Channel BO 5m 247014xxxx
31. Double SC BO Insert Set 247171xxxx
32. Double SG BO End Cap Set 247170xxxx

OPTIONAL COMPONENTS:

33 Detachable Spline 2471580000 – Flat 2471590000 – Round
34. Aligner Set 50 5.90" 247323xxxx
35. Aligner Set 50 11.81" 247329xxxx
36. Joint 45° L 2473210000
37. Leveler 2.0" 247344xxxx
38. Reverse Roll Cover Profile L 5m 247058xxxx

xxxx = 4 digit color code. See Color Chart on page 4 for list of color codes.

CABLE GUIDES

STANDARD

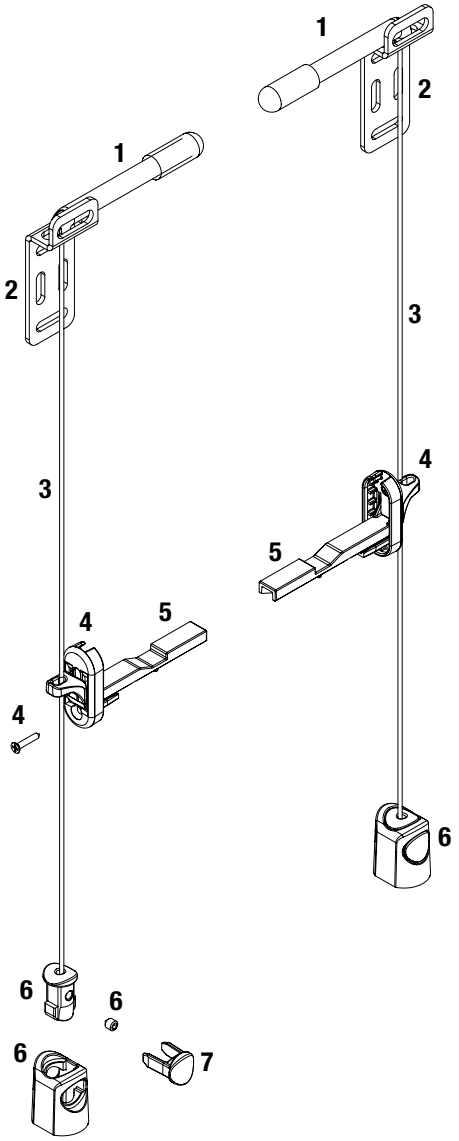

HEAVY DUTY

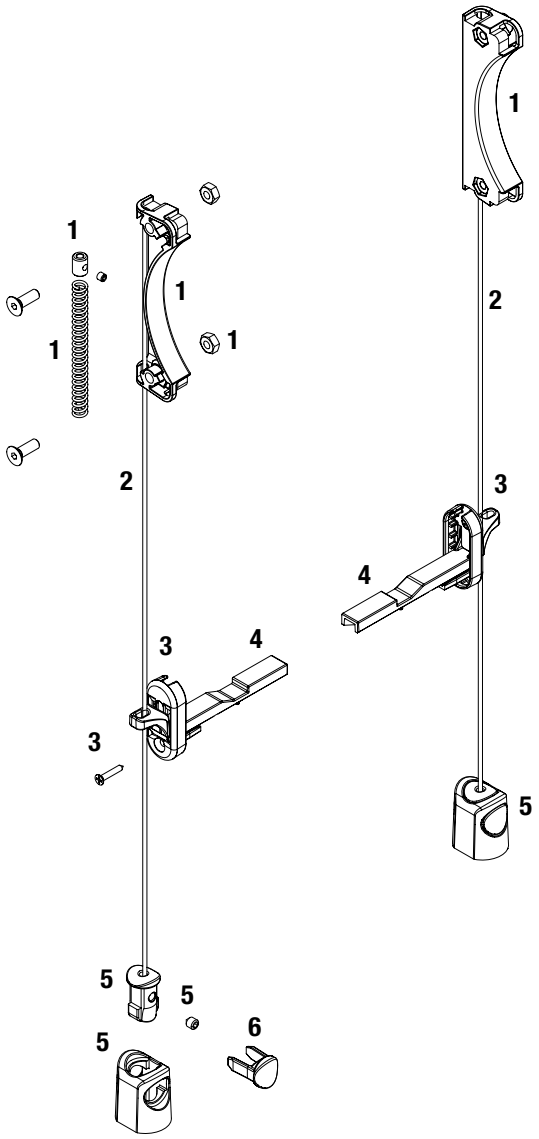

STANDARD COMPONENTS:

1. Cable Tensioner
   245339XXXX
2. Side Guiding Bracket
   247172XXXX – 500
   247181XXXX – Decorative
3. Side Guiding Cable
   156012xxxx
   245110xxxx – Steelwire Coated
4. B. Rail End Cap 13x30 Cable
   247160xxxx
5. B. Rail Cable Guide
   2471747178 – High
   2471757178 – Low
6. Universal Cable Bracket
   2471617060
7. Cable Bracket Cover Lock
   247177xxxx

STANDARD COMPONENTS:

1. Cable Tensioner
   247177XXXX
2. Side Guiding Cable
   156012xxxx
   245110xxxx – Steelwire Coated
   2473250000
3. B. Rail End Cap 13x30 Cable
   247160xxxx
4. B. Rail Cable Guide
   2471747178 – High
   2471757178 – Low
5. Universal Cable Bracket
   2471617060
6. Cable Bracket Cover Lock
   247177xxxx

Motorized Roller Shades

MOTORIZED ROLLER SHADE

5-216 SERIES – MOTOR OPERATION

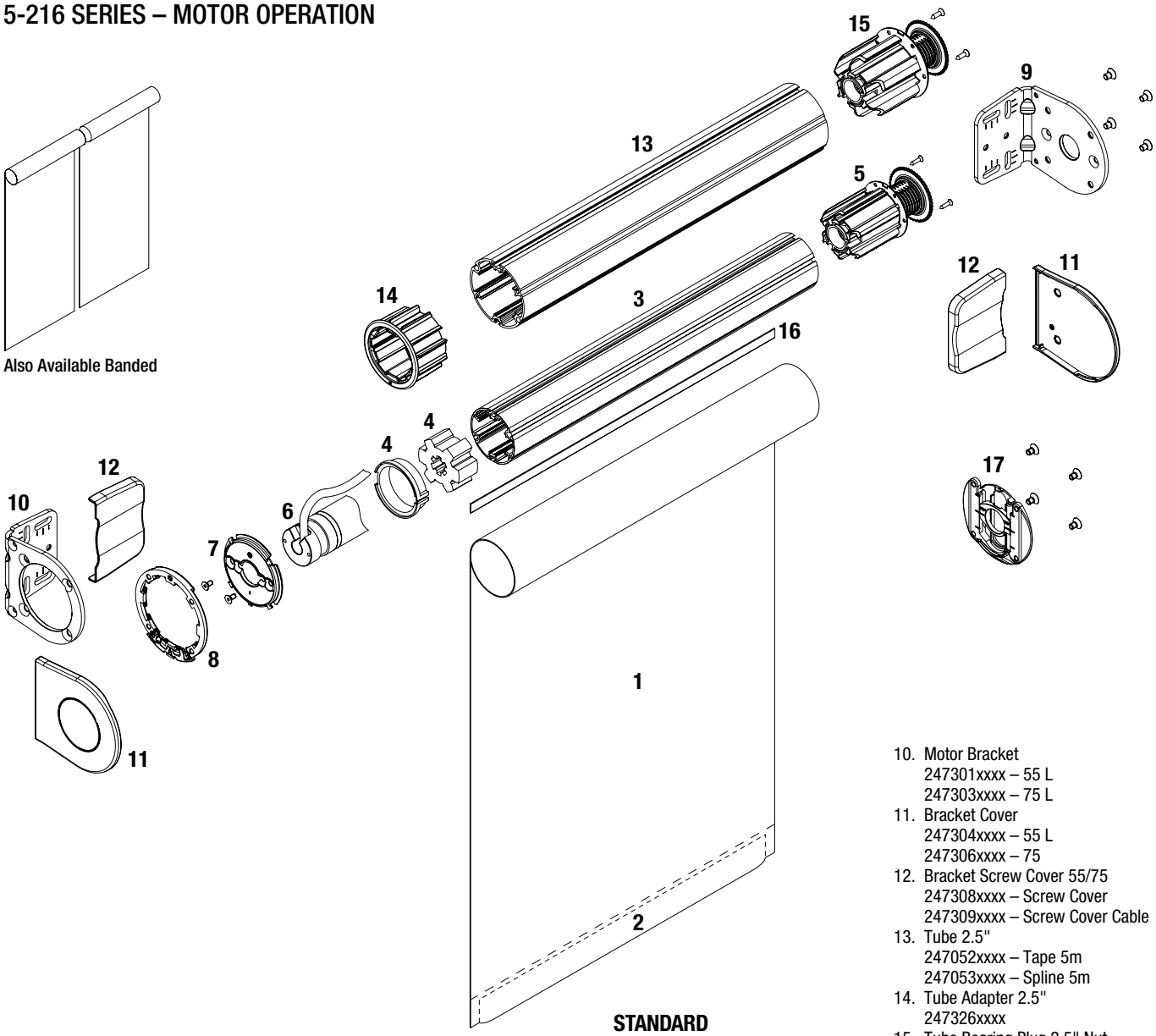

STANDARD COMPONENTS:

1. Fabric
2. Sealed Hembar
3. Tube 2.0"
   247060xxxx – Tape 5m
4. Crown and Drive
   RC445156
   – for HDC100S, HDC200S, HDC100RQ, and HDC200RQ
5. Tube Bearing Plug 2.0" Nut
   247310xxxx
6. Motor
   24750010000 – HDC100S
   24750020000 – HDC200S
   24750030000 – HDC100RQ
   24750040000 – HDC200RQ
7. Plate L No. 2
   2473480003
8. Bracket Adapter 55/75
   247355xxxx
9. Plug Bracket
   247300xxxx – 55 L
   247302xxxx – 75 L
10. Motor Bracket
    247301xxxx – 55 L
    247303xxxx – 75 L
11. Bracket Cover
    247304xxxx – 55 L
    247306xxxx – 75
12. Bracket Screw Cover 55/75
    247308xxxx – Screw Cover
    247309xxxx – Screw Cover Cable
13. Tube 2.5"
    247052xxxx – Tape 5m
    247053xxxx – Spline 5m
14. Tube Adapter 2.5"
    247326xxxx
15. Tube Bearing Plug 2.5" Nut
    247311xxxx

OPTIONAL COMPONENTS:

16. Detachable Spline
    2471580000 – Flat
    2471590000 – Round
17. Leveler 2.0"
    247344xxxx

4. Crown and Drive
   RC445283 – for LS40
   RC445067 – for ST50
   RC445231 – for LT525
6. Motor
   RC445284 – LS40
   RC445286 – ST50 Standard
   RC445285 – ST50 RTS
   RC445208 – LT525 Standard
   RC445230 – LT525 RTS

xxxx = 4 digit color code. See Color Chart on page 4 for list of color codes.

MOTOR BRACKET MOUNTING LOCATIONS

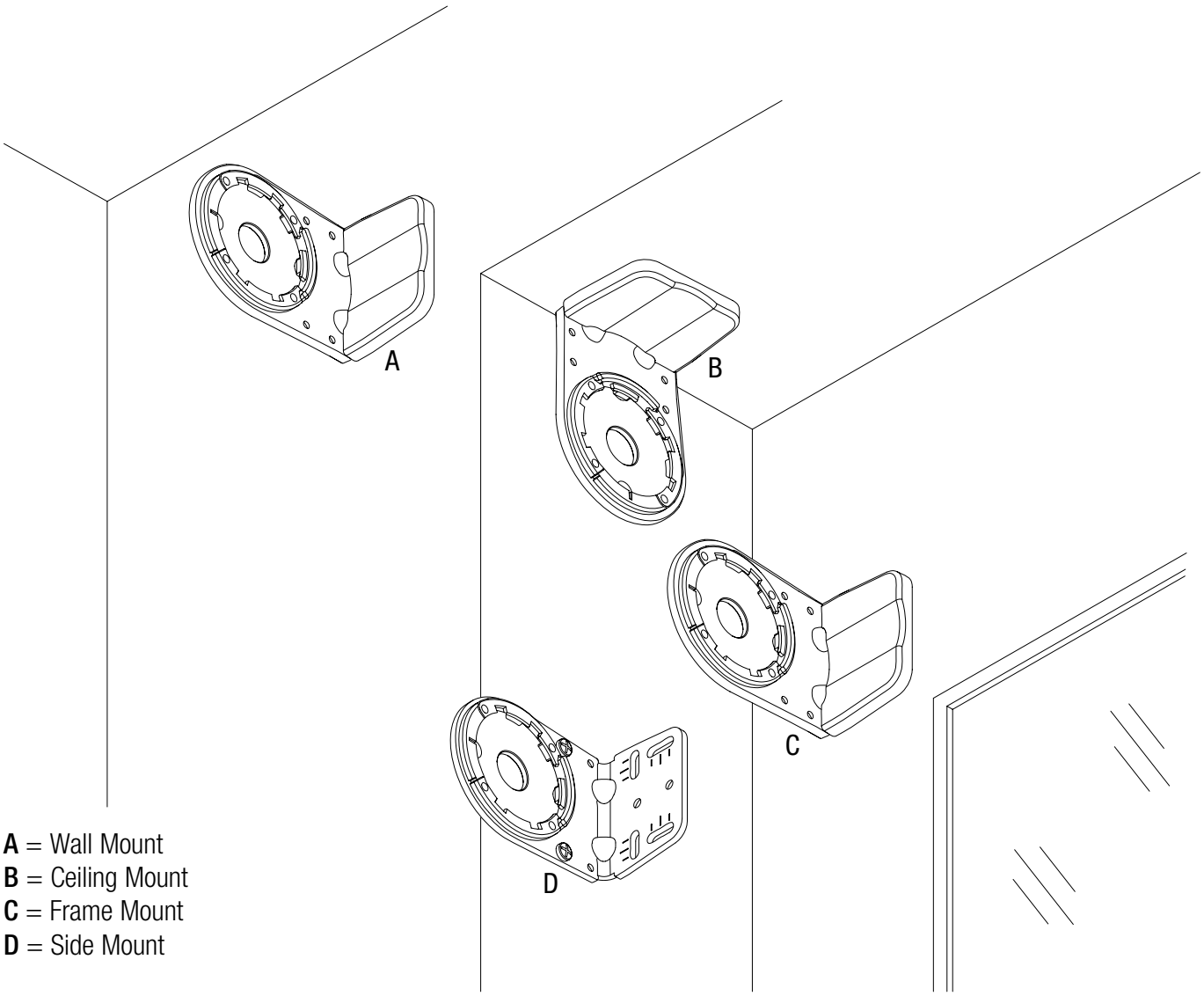

A = Wall Mount
B = Ceiling Mount
C = Frame Mount
D = Side Mount

MOTOR BRACKET DIMENSIONS

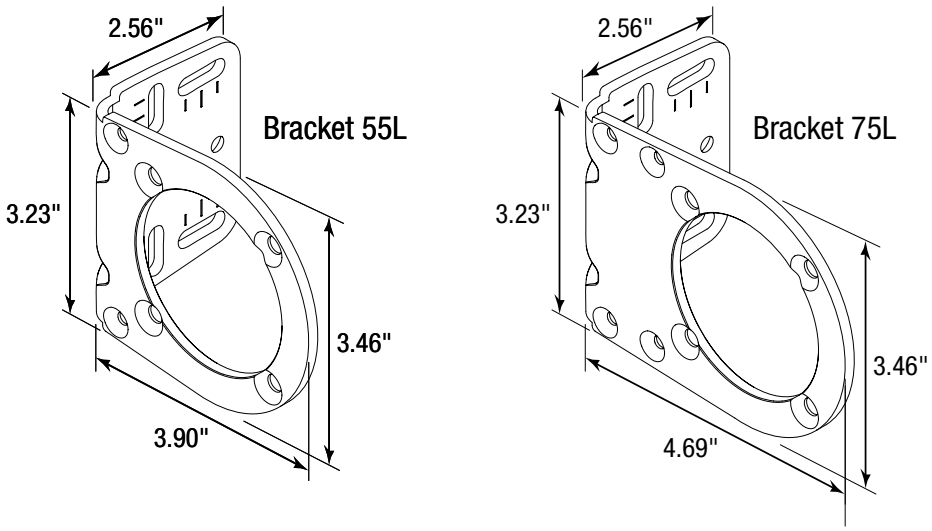

MOTORIZED ROLLER SHADE WITH FASCIA

5-236 SERIES – MOTOR OPERATION

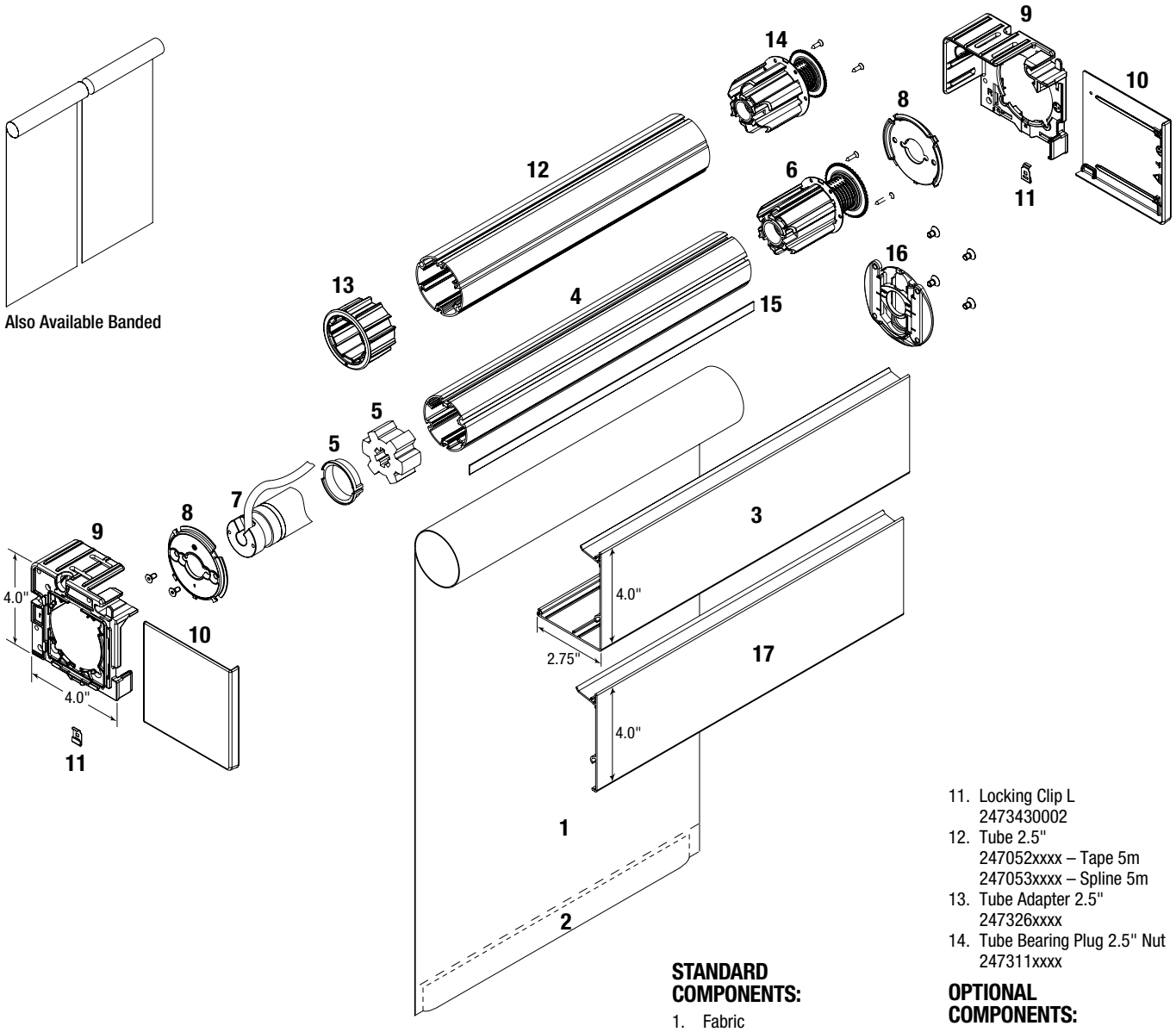

Note: End Mount Installations will not receive a Bracket Cover Set and must be specified when ordering.

STANDARD COMPONENTS:

1. Fabric
2. Sealed Hembar
3. Cover Front Profile L 5m
   247055xxxx
4. Tube 2.0"
   247060xxxx – Tape 5m
5. Crown and Drive
   RC445156
   – for HDC100S, HDC200S, HDC100RQ, and HDC200RQ
6. Tube Bearing Plug 2.0" Nut
   247310xxxx
7. Motor
   24750010000 – HDC100S
   24750020000 – HDC200S
   24750030000 – HDC100RQ
   24750040000 – HDC200RQ
8. Plate L No. 2
   2473480003
9. Bracket Set L
   247345xxxx
10. Bracket Cover Set L Motor
    247330xxxx
11. Locking Clip L
    2473430002
12. Tube 2.5"
    247052xxxx – Tape 5m
    247053xxxx – Spline 5m
13. Tube Adapter 2.5"
    247326xxxx
14. Tube Bearing Plug 2.5" Nut
    247311xxxx

OPTIONAL COMPONENTS:

15. Detachable Spline
    2471580000 – Flat
    2471590000 – Round
16. Leveler 2.0"
    247344xxxx
17. Reverse Roll Cover Profile L 5m
    247058xxxx

5. Crown and Drive
   RC445283 – for LS40
   RC445067 – for ST50
   RC445231 – for LT525
7. Motor
   RC445284 – LS40
   RC445286 – ST50 Standard
   RC445285 – ST50 RTS
   RC445208 – LT525 Standard
   RC445230 – LT525 RTS

xxxx = 4 digit color code. See Color Chart on page 4 for list of color codes.

MOTORIZED ROLLER SHADE WITH BLOCKOUT SYSTEM

5-256 SERIES – MOTOR OPERATION

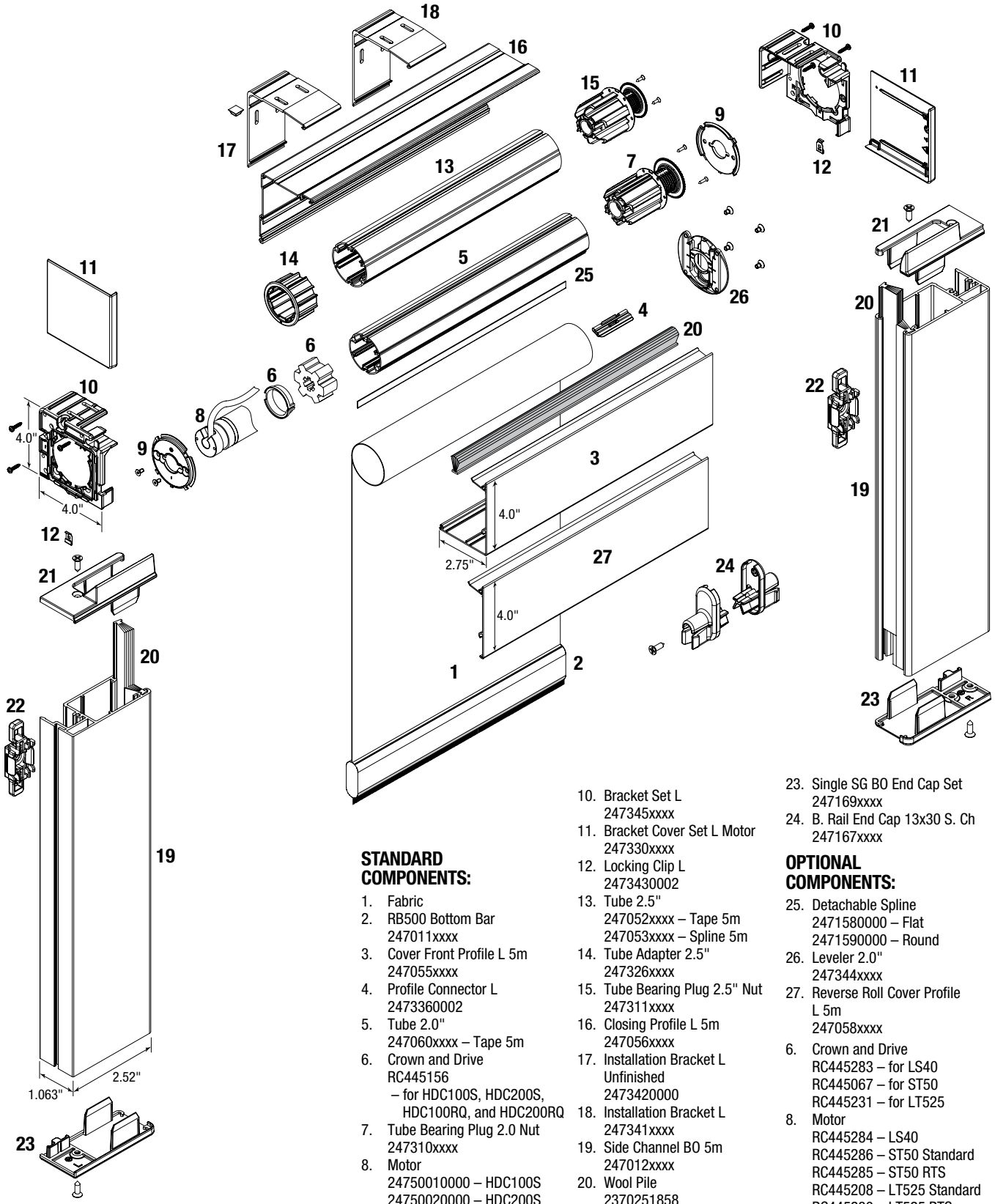

Note: End Mount Installations will not receive a Bracket Cover Set and must be specified when ordering.

STANDARD COMPONENTS:

1. Fabric
2. RB500 Bottom Bar
   247011xxxx
3. Cover Front Profile L 5m
   247055xxxx
4. Profile Connector L
   2473360002
5. Tube 2.0"
   247060xxxx – Tape 5m
6. Crown and Drive
   RC445156
   – for HDC100S, HDC200S, HDC100RQ, and HDC200RQ
7. Tube Bearing Plug 2.0 Nut
   247310xxxx
8. Motor
   24750010000 – HDC100S
   24750020000 – HDC200S
   24750030000 – HDC100RQ
   24750040000 – HDC200RQ
9. Plate L No. 2
   2473480003
10. Bracket Set L
    247345xxxx
11. Bracket Cover Set L Motor
    247330xxxx
12. Locking Clip L
    2473430002
13. Tube 2.5"
    247052xxxx – Tape 5m
    247053xxxx – Spline 5m
14. Tube Adapter 2.5"
    247326xxxx
15. Tube Bearing Plug 2.5" Nut
    247311xxxx
16. Closing Profile L 5m
    247056xxxx
17. Installation Bracket L Unfinished
    2473420000
18. Installation Bracket L
    247341xxxx
19. Side Channel BO 5m
    247012xxxx
20. Wool Pile
    2370251858
21. Single SC BO Insert Set
    247168xxxx
22. Side Channel Fixing Set
    2471630000
23. Single SG BO End Cap Set
    247169xxxx
24. B. Rail End Cap 13x30 S. Ch
    247167xxxx

OPTIONAL COMPONENTS:

25. Detachable Spline
    2471580000 – Flat
    2471590000 – Round
26. Leveler 2.0"
    247344xxxx
27. Reverse Roll Cover Profile L 5m
    247058xxxx

6. Crown and Drive
   RC445283 – for LS40
   RC445067 – for ST50
   RC445231 – for LT525
8. Motor
   RC445284 – LS40
   RC445286 – ST50 Standard
   RC445285 – ST50 RTS
   RC445208 – LT525 Standard
   RC445230 – LT525 RTS

xxxx = 4 digit color code. See Color Chart on page 4 for list of color codes.

MOTORIZED ROLLER SHADE WITH EXTRUDED POCKET

5-216 SERIES – MOTOR OPERATION

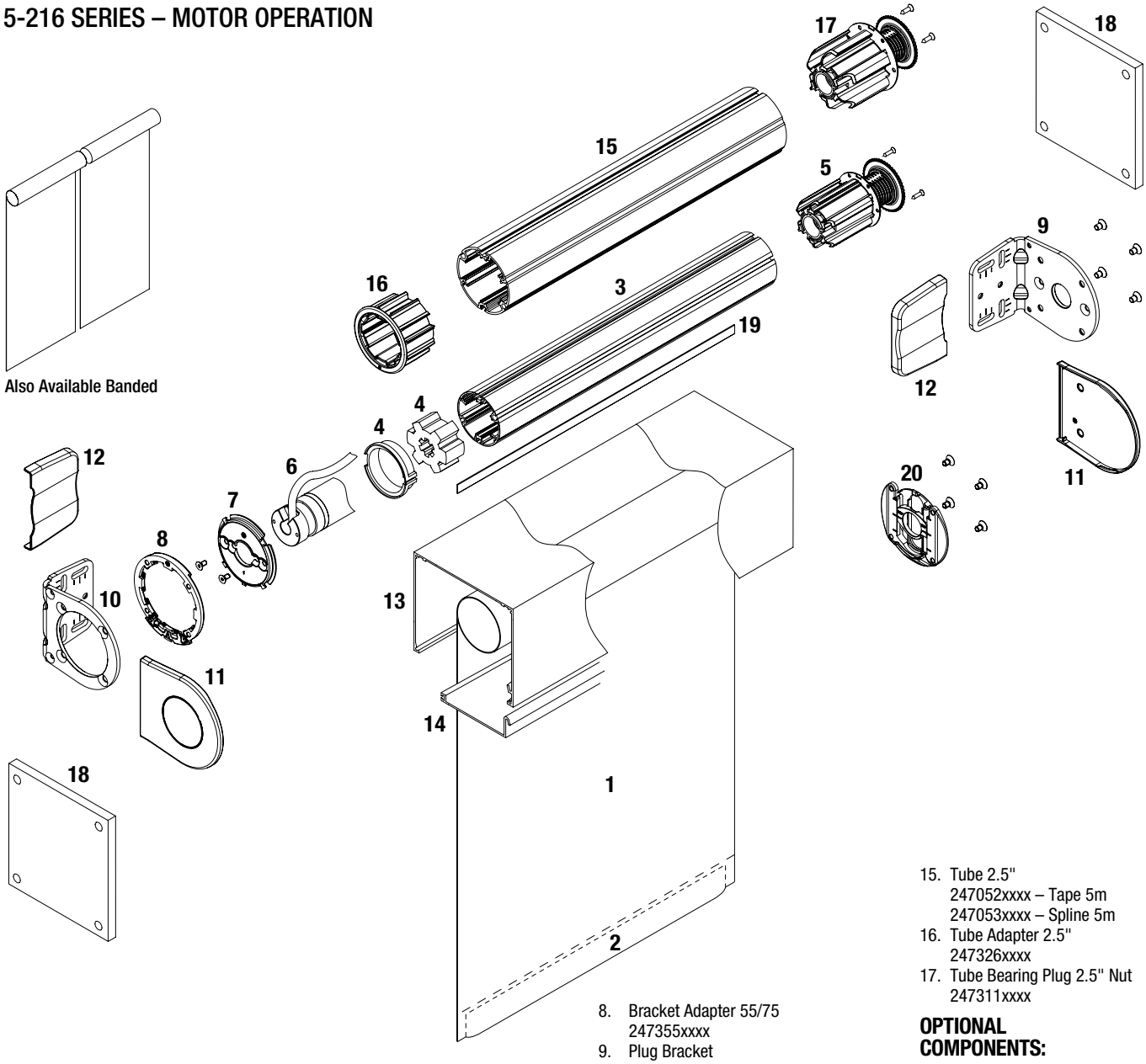

POCKET PROFILES:

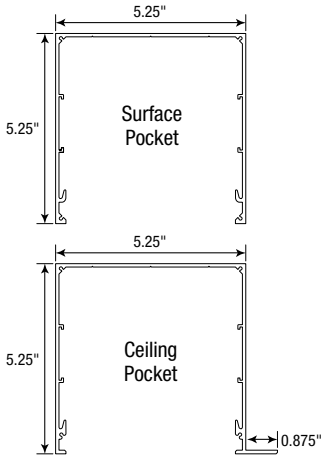

STANDARD COMPONENTS:

1. Fabric
2. Sealed Hembar
3. Tube 2.0"
   247060xxxx – Tape 5m
4. Crown and Drive
   RC445156
   – for HDC100S, HDC200S, HDC100RQ, and HDC200RQ
5. Tube Bearing Plug 2.0" Nut
   247310xxxx
6. Motor
   24750010000 – HDC100S
   24750020000 – HDC200S
   24750030000 – HDC100RQ
   24750040000 – HDC200RQ
7. Plate L No. 2
   2473480003
8. Bracket Adapter 55/75
   247355xxxx
9. Plug Bracket
   247300xxxx – 55 L
   247302xxxx – 75 L
10. Motor Bracket
    247301xxxx – 55 L
    247303xxxx – 75 L
11. Bracket Cover
    247304xxxx – 55 L
    247306xxxx – 75
12. Bracket Screw Cover 55/75
    247308xxxx – Screw Cover
    247309xxxx – Screw Cover Cable
13. 5.25" Extruded Pocket
    RC502000 – Ceiling Pocket Anodized
    RC502675 – Ceiling Pocket White
    RC503000 – Surface Pocket Anodized
    RC503675 – Surface Pocket White
14. 2" Pocket Bottom Closure
    RC500000 – Anodized
    RC500675 – White
    3" Pocket Bottom Closure
    RC501000 – Anodized
    RC501675 – White
15. Tube 2.5"
    247052xxxx – Tape 5m
    247053xxxx – Spline 5m
16. Tube Adapter 2.5"
    247326xxxx
17. Tube Bearing Plug 2.5" Nut
    247311xxxx

OPTIONAL COMPONENTS:

18. Pocket End Plate
    RC506675 – White
    RC506000 – Anodized
19. Detachable Spline
    2471580000 – Flat
    2471590000 – Round
20. Leveler 2.0"
    247344xxxx

4. Crown and Drive
   RC445283 – for LS40
   RC445067 – for ST50
   RC445231 – for LT525
6. Motor
   RC445284 – LS40
   RC445286 – ST50 Standard
   RC445285 – ST50 RTS
   RC445208 – LT525 Standard
   RC445230 – LT525 RTS

xxxx = 4 digit color code. See Color Chart on page 4 for list of color codes.

MOTORIZED COUPLED ROLLER SHADE

5-267 SERIES – COUPLED UNIT

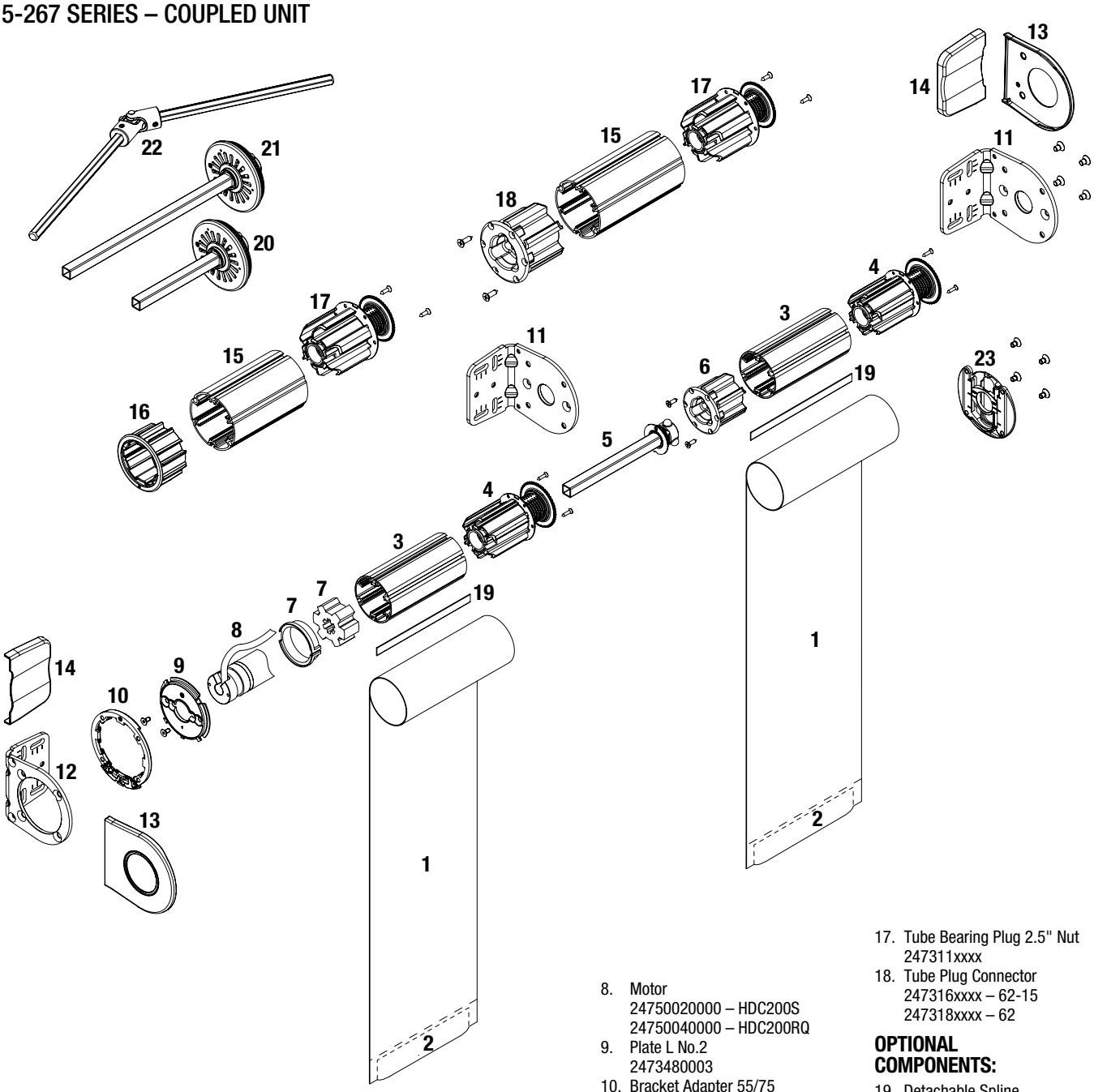

STANDARD COMPONENTS:

1. Fabric
2. Sealed Hembar
3. Tube 2.0"
   247060xxxx – Tape 5m
4. Tube Bearing Plug 2.0" Nut
   247310xxxx
5. Connector Set 50 5.9"
   247322xxxx
6. Tube Plug Connector
   247315xxxx – 50-15
   247317xxxx – 50
7. Crown and Drive
   RC445156
   – for HDC200S and HDC200RQ
8. Motor
   24750020000 – HDC200S
   24750040000 – HDC200RQ
9. Plate L No.2
   2473480003
10. Bracket Adapter 55/75
    247355xxxx
11. Plug Bracket
    247300xxxx – 55 L
    247302xxxx – 75 L
12. Motor Bracket
    247301xxxx – 55 L
    247303xxxx – 75 L
13. Bracket Cover
    247304xxxx – 55 L
    247306xxxx – 75
14. Bracket Screw Cover 55/75
    247308xxxx – Screw Cover
    247309xxxx – Screw Cover Cable
15. Tube 2.5"
    247052xxxx – Tape 5m
    247053xxxx – Spline 5m
16. Tube Adapter 2.5"
    247326xxxx
17. Tube Bearing Plug 2.5" Nut
    247311xxxx
18. Tube Plug Connector
    247316xxxx – 62-15
    247318xxxx – 62

OPTIONAL COMPONENTS:

19. Detachable Spline
    2471580000 – Flat
    2471590000 – Round
20. Aligner Set 50 5.9"
    247323xxxx
21. Aligner Set 50 11.81"
    247329xxxx
22. Joint 45° L
    2473210000
23. Leveler 2.0"

7. Crown and Drive
   RC445231 – for LT525
8. Motor
   RC445208 – LT525 Standard
   RC445230 – LT525 RTS

xxxx = 4 digit color code. See Color Chart on page 4 for list of color codes.

MOTORIZED COUPLED ROLLER SHADE WITH FASCIA

5-287 SERIES – COUPLED UNIT

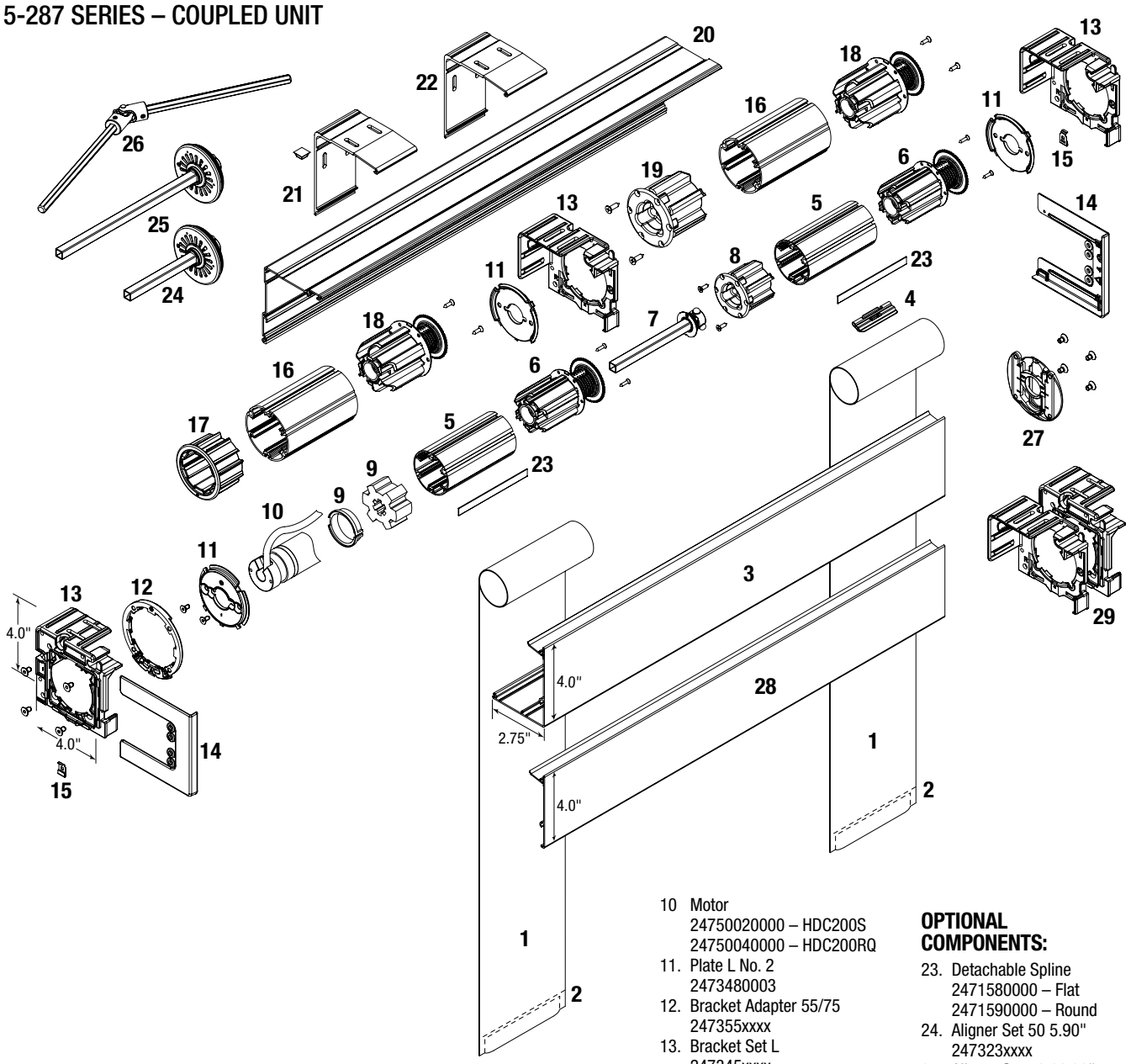

STANDARD COMPONENTS:

1. Fabric
2. Sealed Hembar
3. Cover Front Profile L 5m
   247055xxxx
4. Profile Connector L
   2473360002
5. Tube 2.0"
   247060xxxx – Tape 5m
6. Tube Bearing Plug 2.0" Nut
   247310xxxx
7. Connector Set 50 5.90"
   247322xxxx
8. Tube Plug Connector
   247315xxxx – 50-15
   247317xxxx – 50
9. Crown and Drive
   RC445156
   – for HDC200S and HDC200RQ
10. Motor
    24750020000 – HDC200S
    24750040000 – HDC200RQ
11. Plate L No. 2
    2473480003
12. Bracket Adapter 55/75
    247355xxxx
13. Bracket Set L
    247345xxxx
14. Bracket Cover Set L Coupled
    247331xxxx
15. Locking Clip L
    2473430002
16. Tube 2.5"
    247052xxxx – Tape 5m
    247053xxxx – Spline 5m
17. Tube Adapter 2.5"
    247326xxxx
18. Tube Bearing Plug 2.5" Nut
    247311xxxx
19. Tube Plug Connector
    247316xxxx – 62-15
    247318xxxx – 62
20. Closing Profile L 5m
    247056xxxx
21. Installation Bracket L
    Unfinished
    2473420000
22. Installation Bracket L
    247341xxxx

OPTIONAL COMPONENTS:

23. Detachable Spline
    2471580000 – Flat
    2471590000 – Round
24. Aligner Set 50 5.90"
    247323xxxx
25. Aligner Set 50 11.81"
    247329xxxx
26. Joint 45° L
    2473210000
27. Leveler 2.0"
    247344xxxx
28. Reverse Roll Cover Profile L 5m
    247058xxxx
29. Bracket Set L
    247345xxxx
    – for two-piece Fascia (Shade width > 192")

9. Crown and Drive
   RC445231 – for LT525
10. Motor
    RC445208 – LT525 Standard
    RC445230 – LT525 RTS

xxxx = 4 digit color code. See Color Chart on page 4 for list of color codes.

Note: End Mount Installations will not receive a Bracket Cover Set and must be specified when ordering.

MOTORIZED COUPLED ROLLER SHADE WITH BLOCKOUT SYSTEM

5-267 SERIES – COUPLED UNIT

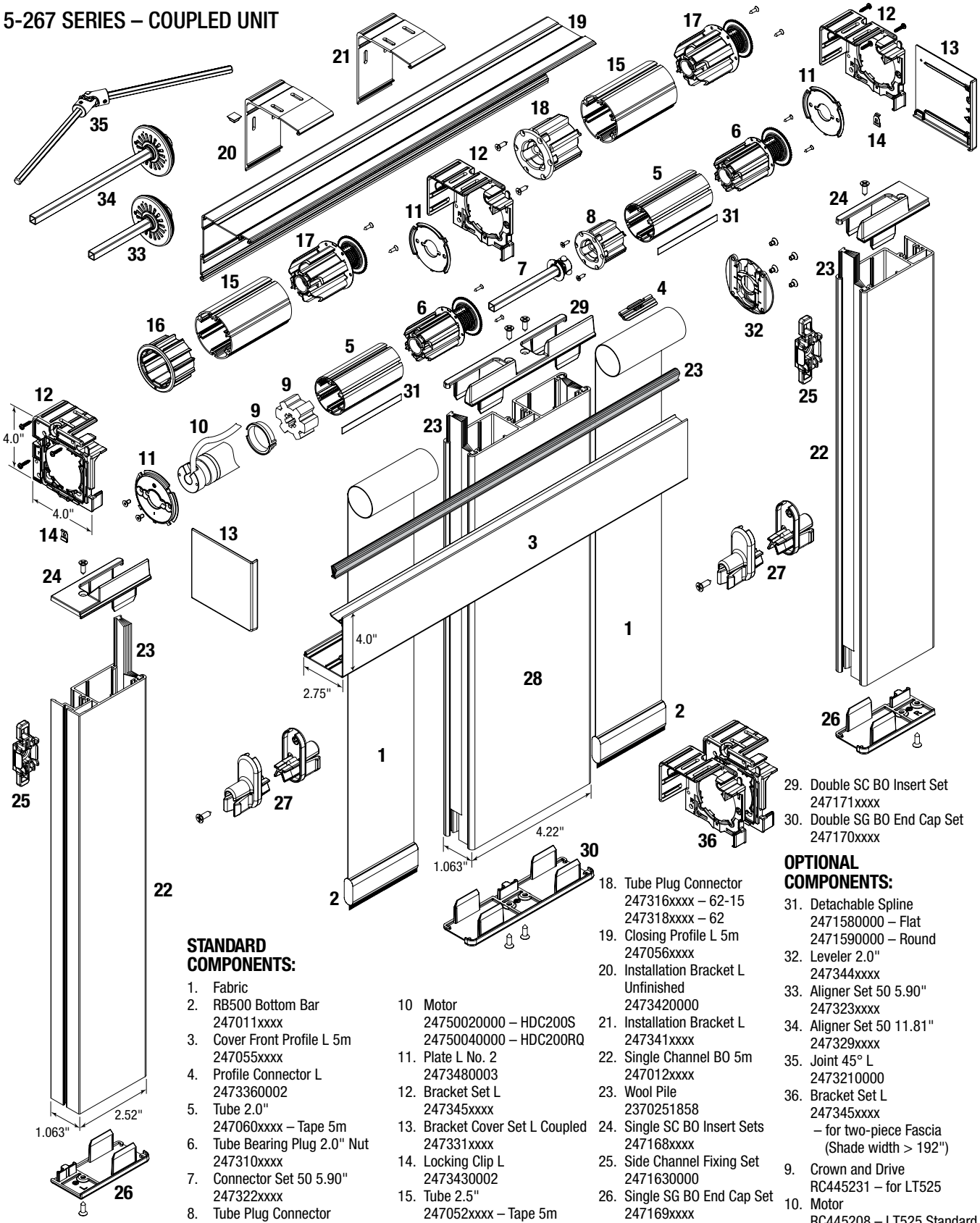

Note: End Mount Installations will not receive a Bracket Cover Set and must be specified when ordering.

STANDARD COMPONENTS:

1. Fabric
2. RB500 Bottom Bar
   247011xxxx
3. Cover Front Profile L 5m
   247055xxxx
4. Profile Connector L
   2473360002
5. Tube 2.0"
   247060xxxx – Tape 5m
6. Tube Bearing Plug 2.0" Nut
   247310xxxx
7. Connector Set 50 5.90"
   247322xxxx
8. Tube Plug Connector
   247315xxxx – 50-15
   247317xxxx – 50
9. Crown and Drive
   RC445156
   – for HDC200S and HDC200RQ

10 Motor
   24750020000 – HDC200S
   24750040000 – HDC200RQ
11. Plate L No. 2
    2473480003
12. Bracket Set L
    247345xxxx
13. Bracket Cover Set L Coupled
    247331xxxx
14. Locking Clip L
    2473430002
15. Tube 2.5"
    247052xxxx – Tape 5m
    247053xxxx – Spline 5m
16. Tube Adapter 2.5"
    247326xxxx
17. Tube Bearing Plug 2.5" Nut
    247311xxxx
18. Tube Plug Connector
    247316xxxx – 62-15
    247318xxxx – 62
19. Closing Profile L 5m
    247056xxxx
20. Installation Bracket L
    Unfinished
    2473420000
21. Installation Bracket L
    247341xxxx
22. Single Channel BO 5m
    247012xxxx
23. Wool Pile
    2370251858
24. Single SC BO Insert Sets
    247168xxxx
25. Side Channel Fixing Set
    2471630000
26. Single SG BO End Cap Set
    247169xxxx
27. B. Rail End Cap 13x30
    S. Channel
    247167xxxx
28. Double Channel BO 5m
    247014xxxx
29. Double SC BO Insert Set
    247171xxxx
30. Double SG BO End Cap Set
    247170xxxx

OPTIONAL COMPONENTS:

31. Detachable Spline
    2471580000 – Flat
    2471590000 – Round
32. Leveler 2.0"
    247344xxxx
33. Aligner Set 50 5.90"
    247323xxxx
34. Aligner Set 50 11.81"
    247329xxxx
35. Joint 45° L
    2473210000
36. Bracket Set L
    247345xxxx
    – for two-piece Fascia
    (Shade width > 192")

9. Crown and Drive
   RC445231 – for LT525
10. Motor
    RC445208 – LT525 Standard
    RC445230 – LT525 RTS

xxxx = 4 digit color code. See Color Chart on page 4 for list of color codes.

MOTORIZED DUAL ROLLER SHADE

5-216 SERIES – MOTOR OPERATION

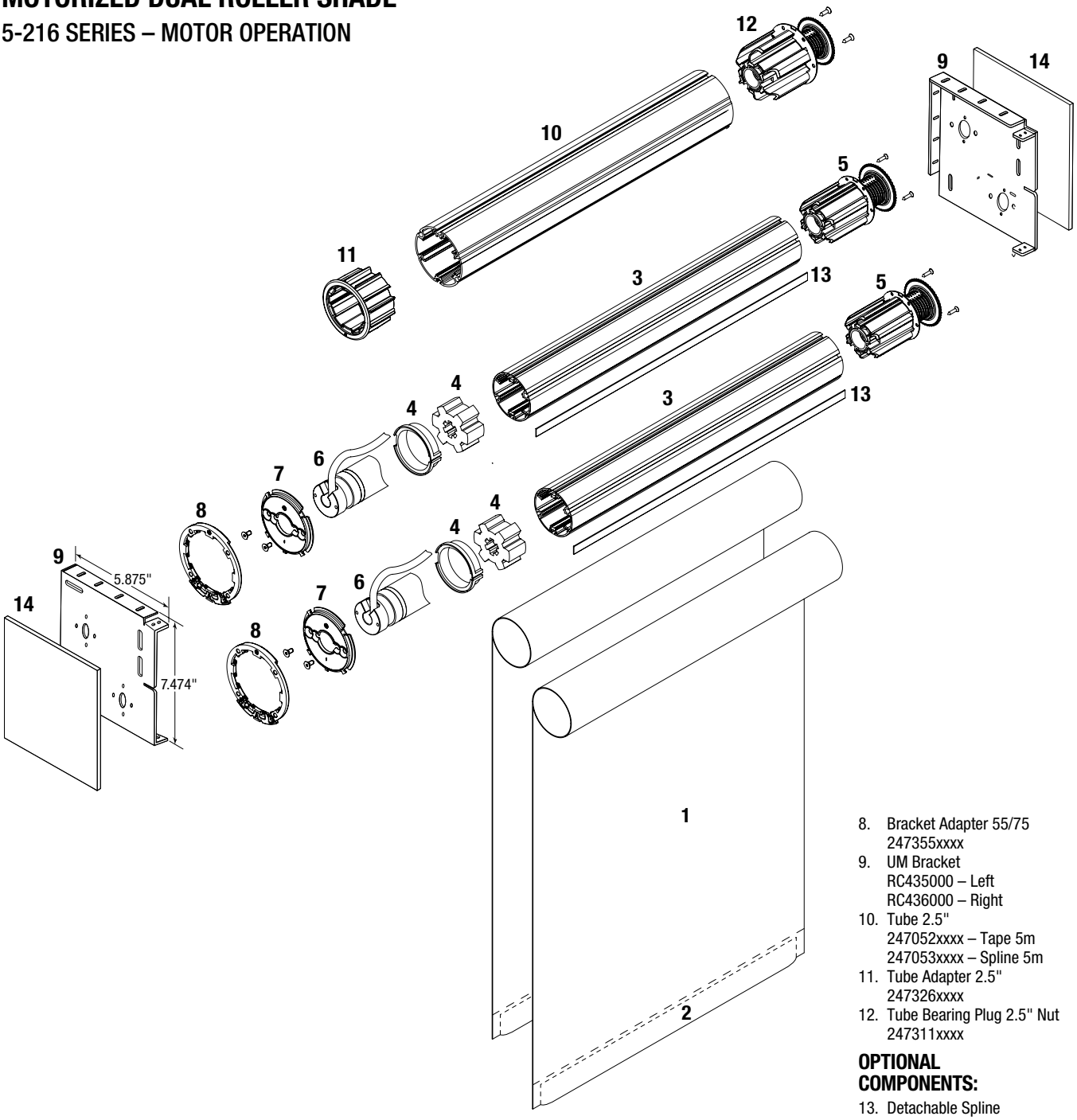

STANDARD COMPONENTS:

1. Fabric
2. Sealed Hembar
3. Tube 2.0"
   247060xxxx – Tape 5m
4. Crown and Drive
   RC445156
   – for HDC100S and HDC100RQ
5. Tube Bearing Plug 2.0" Nut
   247310xxxx
6. Motor
   24750010000 – HDC100S
   24750030000 – HDC100RQ
7. Plate L No. 2
   2473480003
8. Bracket Adapter 55/75
   247355xxxx
9. UM Bracket
   RC435000 – Left
   RC436000 – Right
10. Tube 2.5"
    247052xxxx – Tape 5m
    247053xxxx – Spline 5m
11. Tube Adapter 2.5"
    247326xxxx
12. Tube Bearing Plug 2.5" Nut
    247311xxxx

OPTIONAL COMPONENTS:

13. Detachable Spline
    2471580000 – Flat
    2471590000 – Round
14. Bracket End Plate
    RC437000 – Anodized
    RC437048 – Black
    RC437350 – Vanilla
    RC437785 – White
    RC437864 – Bronze
4. Crown and Drive
   RC445067 – for ST50
6. Motor
   RC445286 – ST50 Standard
   RC445285 – ST50 RTS

xxxx = 4 digit color code. See Color Chart on page 4 for list of color codes.

MOTORIZED DUAL ROLLER SHADE WITH FASCIA

5-236 SERIES – MOTOR OPERATION

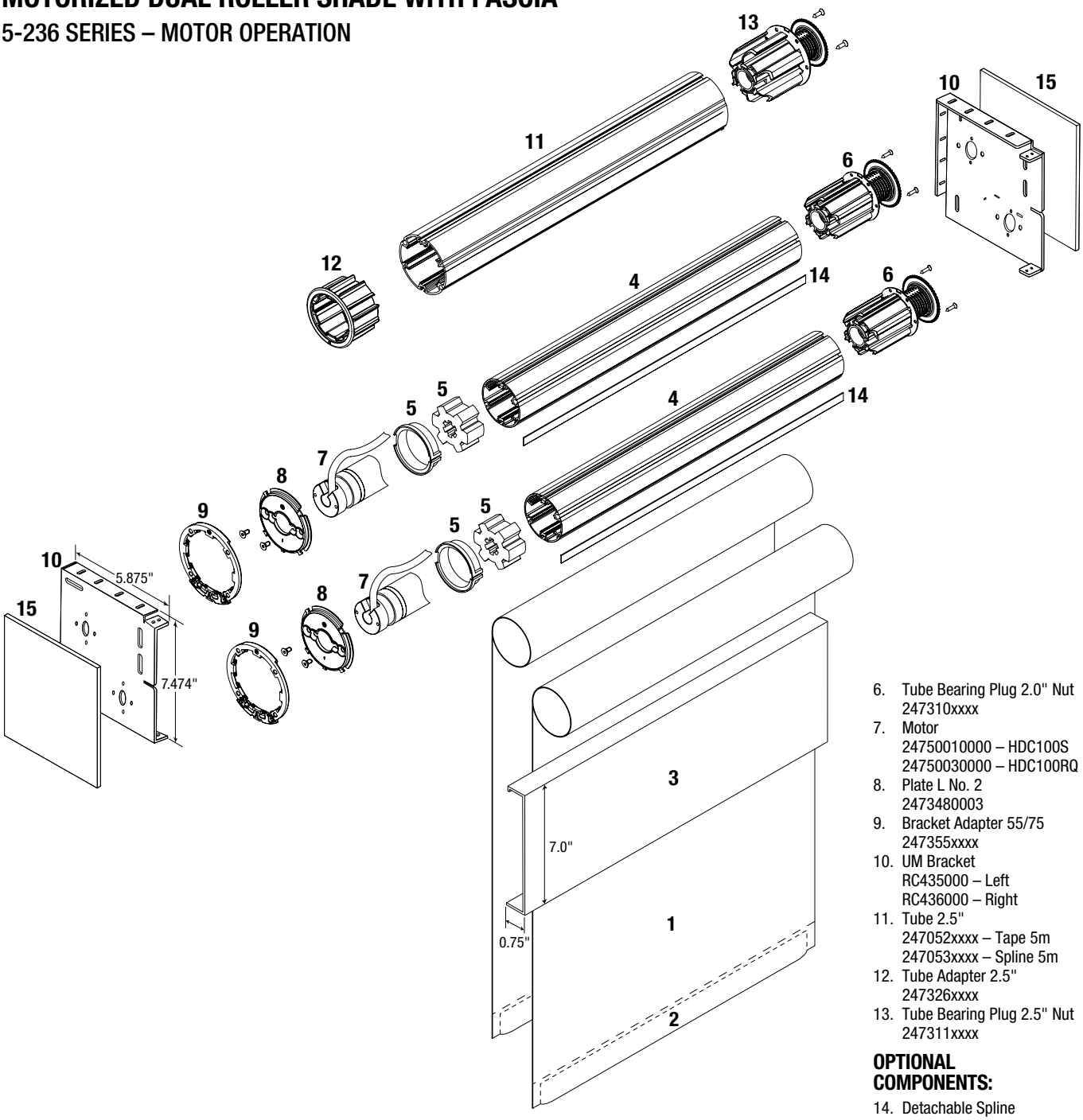

STANDARD COMPONENTS:

1. Fabric
2. Sealed Hembar
3. 7" Fascia
   RC511000 – Anodized
   RC511048 – Black
   RC511350 – Vanilla
   RC511785 – White
   RC511864 – Bronze
4. Tube 2.0"
   247060xxxx – Tape 5m
5. Crown and Drive
   RC445156
   – for HDC100S and HDC100RQ
6. Tube Bearing Plug 2.0" Nut
   247310xxxx
7. Motor
   24750010000 – HDC100S
   24750030000 – HDC100RQ
8. Plate L No. 2
   2473480003
9. Bracket Adapter 55/75
   247355xxxx
10. UM Bracket
    RC435000 – Left
    RC436000 – Right
11. Tube 2.5"
    247052xxxx – Tape 5m
    247053xxxx – Spline 5m
12. Tube Adapter 2.5"
    247326xxxx
13. Tube Bearing Plug 2.5" Nut
    247311xxxx

OPTIONAL COMPONENTS:

14. Detachable Spline
    2471580000 – Flat
    2471590000 – Round
15. Bracket End Plate
    RC437000 – Anodized
    RC437048 – Black
    RC437350 – Vanilla
    RC437785 – White
    RC437864 – Bronze

5. Crown and Drive
   RC445067 – for ST50
7. Motor
   RC445286 – ST50 Standard
   RC445285 – ST50 RTS

xxxx = 4 digit color code. See Color Chart on page 4 for list of color codes.

MOTORIZED DUAL ROLLER SHADE WITH BLOCKOUT SYSTEM

5-256 SERIES – MOTOR OPERATION

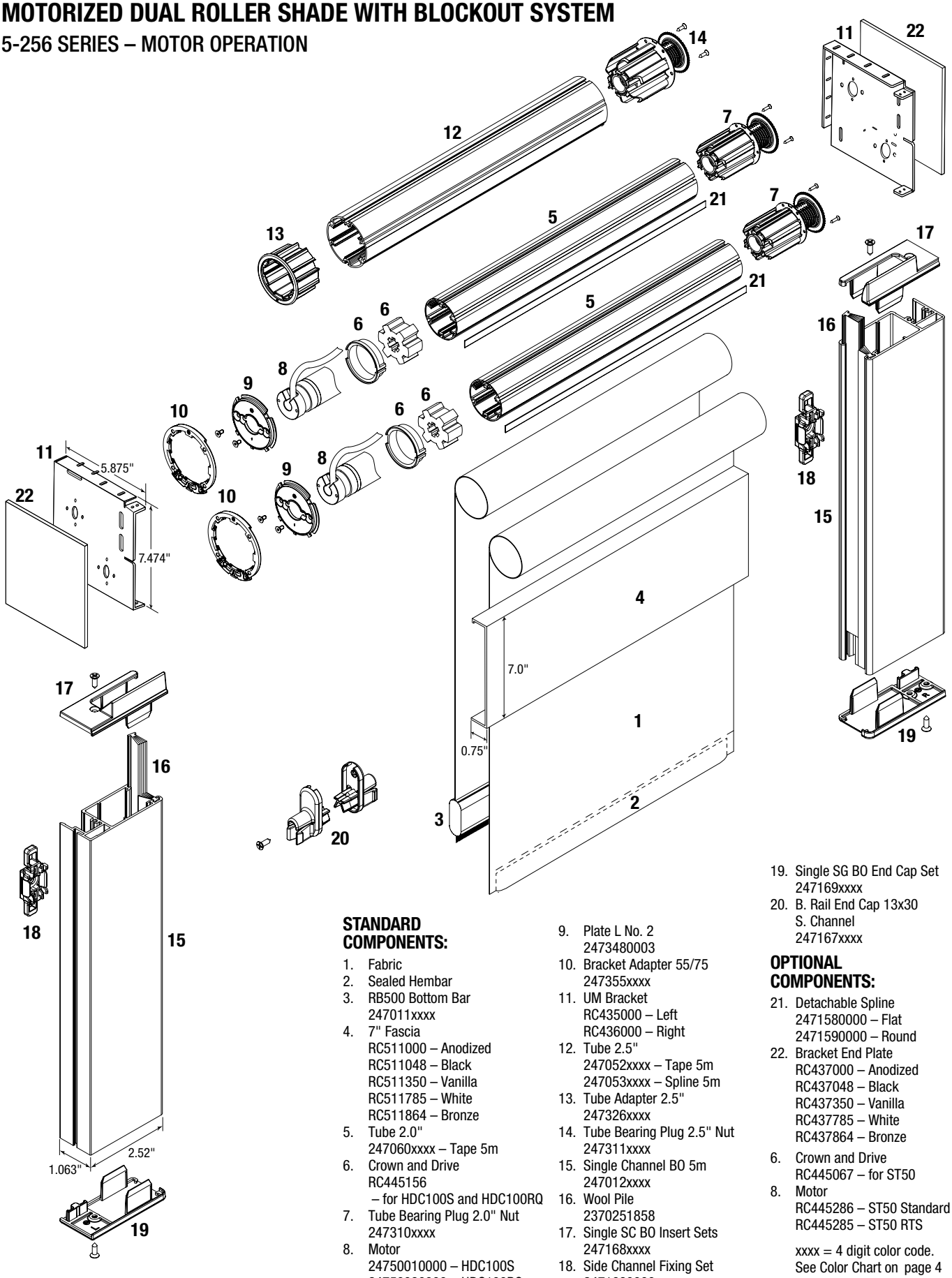

STANDARD COMPONENTS:

1. Fabric
2. Sealed Hembar
3. RB500 Bottom Bar
   247011xxxx
4. 7" Fascia
   RC511000 – Anodized
   RC511048 – Black
   RC511350 – Vanilla
   RC511785 – White
   RC511864 – Bronze
5. Tube 2.0"
   247060xxxx – Tape 5m
6. Crown and Drive
   RC445156
   – for HDC100S and HDC100RQ
7. Tube Bearing Plug 2.0" Nut
   247310xxxx
8. Motor
   24750010000 – HDC100S
   24750030000 – HDC100RQ
9. Plate L No. 2
   2473480003
10. Bracket Adapter 55/75
    247355xxxx
11. UM Bracket
    RC435000 – Left
    RC436000 – Right
12. Tube 2.5"
    247052xxxx – Tape 5m
    247053xxxx – Spline 5m
13. Tube Adapter 2.5"
    247326xxxx
14. Tube Bearing Plug 2.5" Nut
    247311xxxx
15. Single Channel BO 5m
    247012xxxx
16. Wool Pile
    2370251858
17. Single SC BO Insert Sets
    247168xxxx
18. Side Channel Fixing Set
    2471630000
19. Single SG BO End Cap Set
    247169xxxx
20. B. Rail End Cap 13x30
    S. Channel
    247167xxxx

OPTIONAL COMPONENTS:

21. Detachable Spline
    2471580000 – Flat
    2471590000 – Round
22. Bracket End Plate
    RC437000 – Anodized
    RC437048 – Black
    RC437350 – Vanilla
    RC437785 – White
    RC437864 – Bronze

6. Crown and Drive
   RC445067 – for ST50
8. Motor
   RC445286 – ST50 Standard
   RC445285 – ST50 RTS

xxxx = 4 digit color code. See Color Chart on page 4 for list of color codes.

MOTORIZED DUAL ROLLER SHADE WITH EXTRUDED POCKET

5-216 SERIES – MOTOR OPERATION

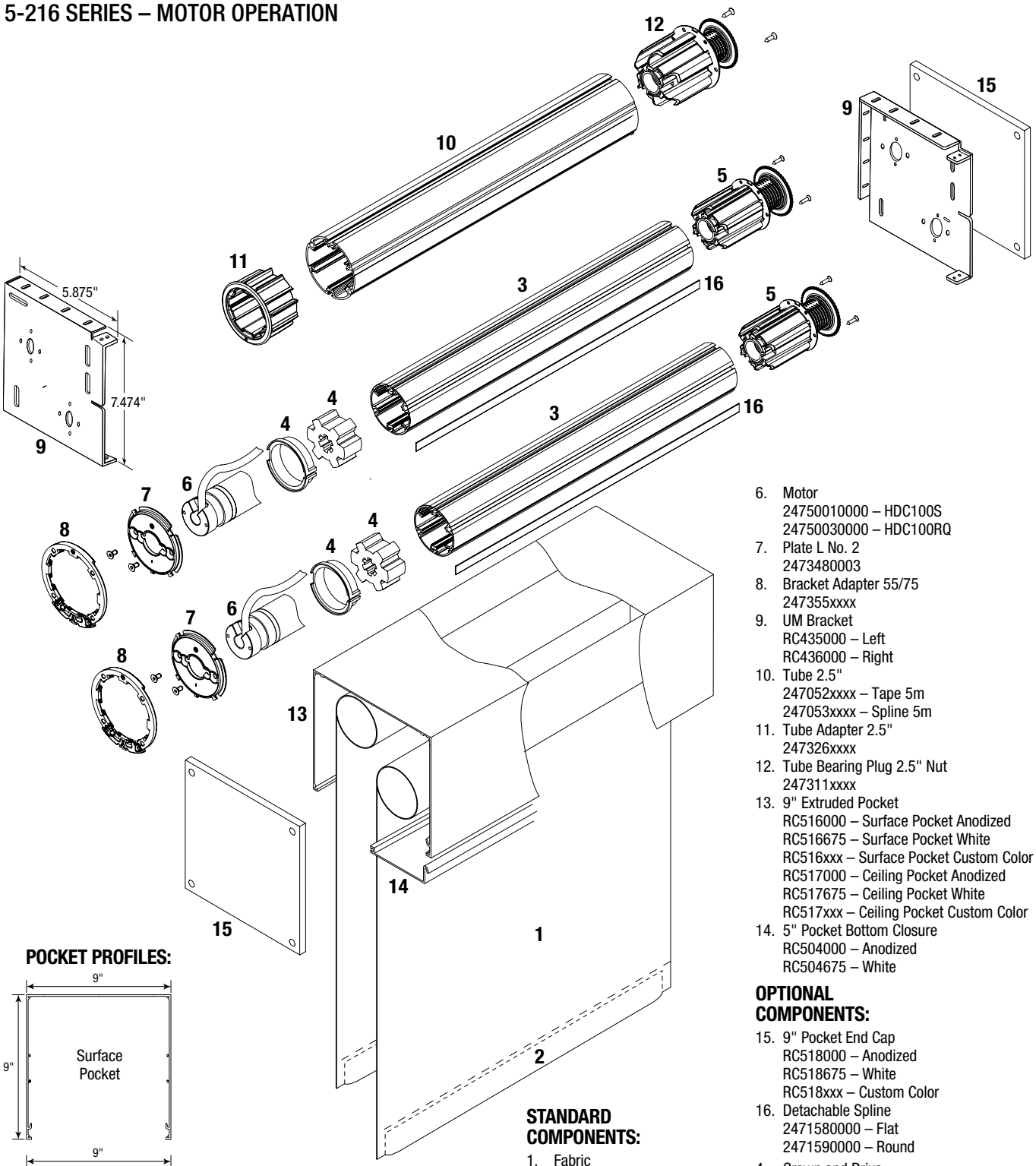

POCKET PROFILES:

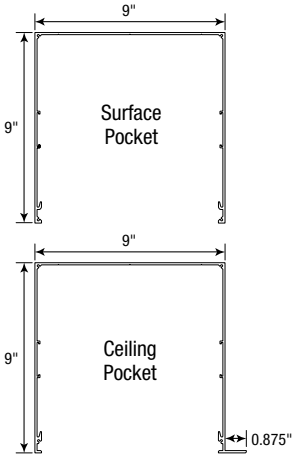

STANDARD COMPONENTS:

1. Fabric
2. Sealed Hembar
3. Tube 2.0"
   247060xxxx – Tape 5m
4. Crown and Drive
   RC445156
   – for HDC100S and HDC100RQ
5. Tube Bearing Plug 2.0" Nut
   247310xxxx
6. Motor
   24750010000 – HDC100S
   24750030000 – HDC100RQ
7. Plate L No. 2
   2473480003
8. Bracket Adapter 55/75
   247355xxxx
9. UM Bracket
   RC435000 – Left
   RC436000 – Right
10. Tube 2.5"
    247052xxxx – Tape 5m
    247053xxxx – Spline 5m
11. Tube Adapter 2.5"
    247326xxxx
12. Tube Bearing Plug 2.5" Nut
    247311xxxx
13. 9" Extruded Pocket
    RC516000 – Surface Pocket Anodized
    RC516675 – Surface Pocket White
    RC516xxx – Surface Pocket Custom Color
    RC517000 – Ceiling Pocket Anodized
    RC517675 – Ceiling Pocket White
    RC517xxx – Ceiling Pocket Custom Color
14. 5" Pocket Bottom Closure
    RC504000 – Anodized
    RC504675 – White

OPTIONAL COMPONENTS:

15. 9" Pocket End Cap
    RC518000 – Anodized
    RC518675 – White
    RC518xxx – Custom Color
16. Detachable Spline
    2471580000 – Flat
    2471590000 – Round

4. Crown and Drive
   RC445067 – for ST50
6. Motor
   RC445286 – ST50 Standard
   RC445285 – ST50 RTS

xxxx = 4 digit color code. See Color Chart on page 4 for list of color codes.

MOTORIZED DUAL COUPLED ROLLER SHADE

5-269 SERIES – COUPLED UNIT

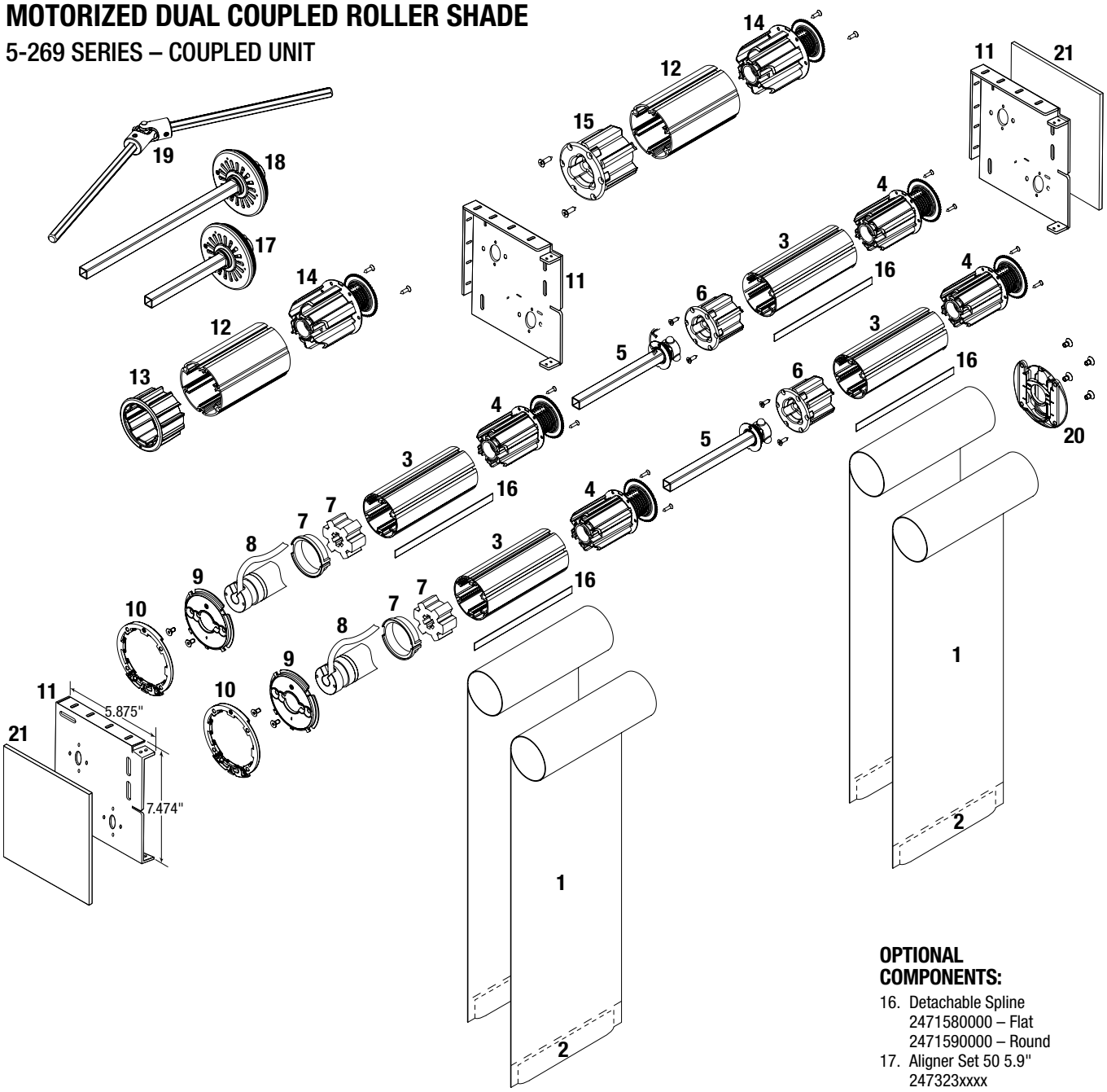

STANDARD COMPONENTS:

1. Fabric
2. Sealed Hembar
3. Tube 2.0"
   247060xxxx – Tape 5m
4. Tube Bearing Plug 2.0" Nut
   247310xxxx
5. Connector Set 50 5.9"
   247322xxxx
6. Tube Plug Connector
   247315xxxx – 50-15
   247317xxxx – 50
7. Crown and Drive
   RC445156
   – for HDC200S and HDC200RQ
8. Motor
   24750020000 – HDC200S
   24750040000 – HDC200RQ
9. Plate L No.2
   2473480003
10. Bracket Adapter 55/75
    247355xxxx
11. UM Bracket
    RC435000 – Left
    RC436000 – Right
12. Tube 2.5"
    247052xxxx – Tape 5m
    247053xxxx – Spline 5m
13. Tube Adapter 2.5"
    247326xxxx
14. Tube Bearing Plug 2.5" Nut
    247311xxxx
15. Tube Plug Connector
    247316xxxx – 62-15
    247318xxxx – 62

OPTIONAL COMPONENTS:

16. Detachable Spline
    2471580000 – Flat
    2471590000 – Round
17. Aligner Set 50 5.9"
    247323xxxx
18. Aligner Set 50 11.81"
    247329xxxx
19. Joint 45° L
    2473210000
20. Leveler 2.0"
    247344xxxx
21. Bracket End Plate
    RC437000 – Anodized
    RC437048 – Black
    RC437350 – Vanilla
    RC437785 – White
    RC437864 – Bronze

7. Crown and Drive
   RC445231 – for LT525
8. Motor
   RC445208 – LT525 Standard
   RC445230 – LT525 RTS

xxxx = 4 digit color code.
See Color Chart on page 4 for list of color codes.

MOTORIZED DUAL COUPLED ROLLER SHADE WITH FASCIA

5-289 SERIES – COUPLED UNIT

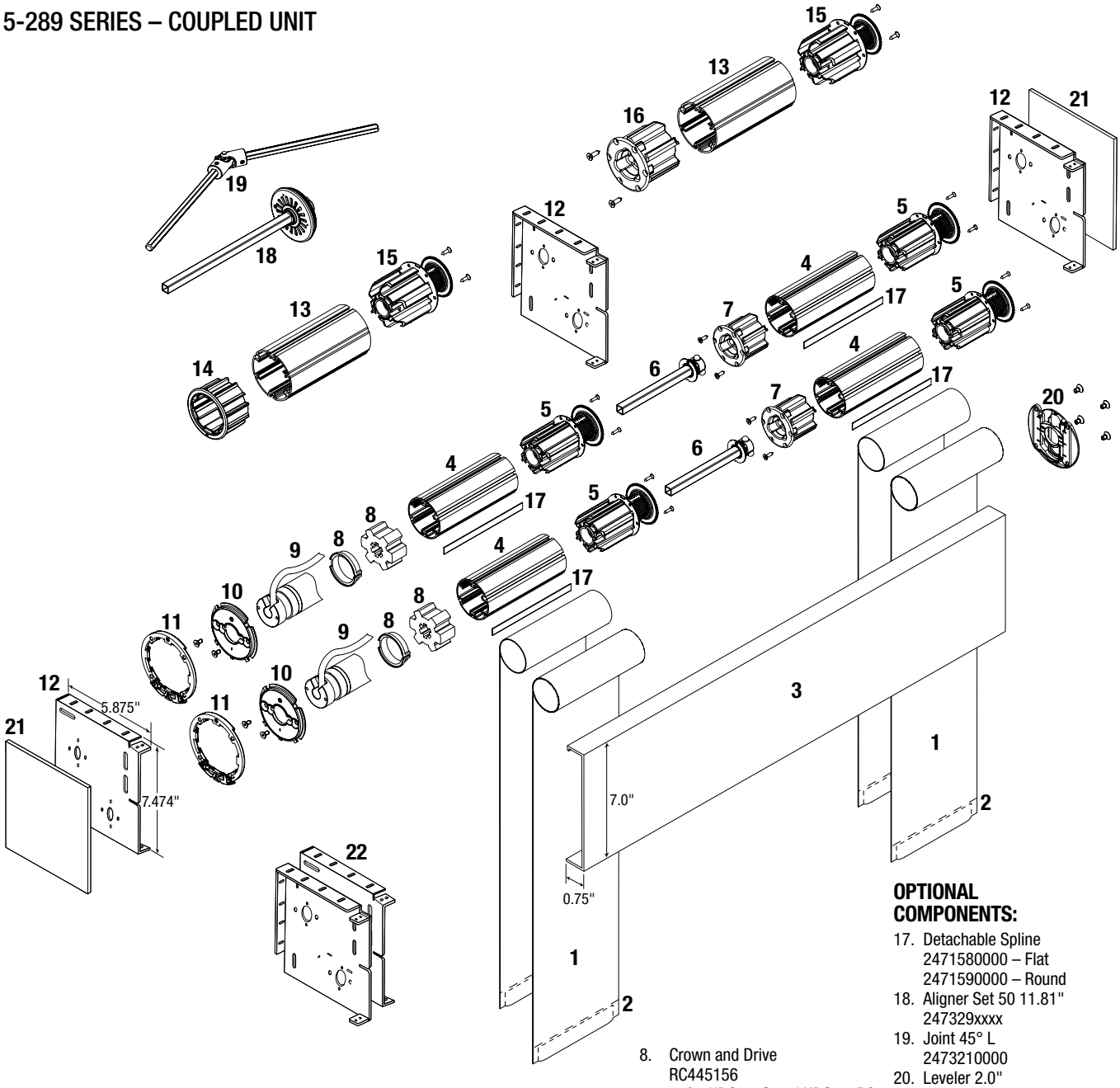

STANDARD COMPONENTS:

1. Fabric
2. Sealed Hembar
3. 7" Fascia
   RC511000 – Anodized
   RC511048 – Black
   RC511350 – Vanilla
   RC511785 – White
   RC511864 – Bronze
4. Tube 2.0"
   247060xxxx – Tape 5m
5. Tube Bearing Plug 2.0" Nut
   247310xxxx
6. Connector Set 50 5.90"
   247322xxxx
7. Tube Plug Connector
   247315xxxx – 50-15
   247317xxxx – 50
8. Crown and Drive
   RC445156
   – for HDC200S and HDC200RQ
9. Motor
   24750020000 – HDC200S
   24750040000 – HDC200RQ
10. Plate L No. 2
    2473480003
11. Bracket Adapter 55/75
    247355xxxx
12. UM Bracket
    RC435000 – Left
    RC436000 – Right
13. Tube 2.5"
    247052xxxx – Tape 5m
    247053xxxx – Spline 5m
14. Tube Adapter 2.5"
    247326xxxx
15. Tube Bearing Plug 2.5" Nut
    247311xxxx
16. Tube Plug Connector
    247316xxxx – 62-15
    247318xxxx – 62

OPTIONAL COMPONENTS:

17. Detachable Spline
    2471580000 – Flat
    2471590000 – Round
18. Aligner Set 50 11.81"
    247329xxxx
19. Joint 45° L
    2473210000
20. Leveler 2.0"
    247344xxxx
21. Bracket End Plate
    RC437000 – Anodized
    RC437048 – Black
    RC437350 – Vanilla
    RC437785 – White
    RC437864 – Bronze
22. UM Bracket
    RC435000 – Left
    RC436000 – Right
    – for two-piece Fascia
    (Shade width > 192")

8. Crown and Drive
   RC445231 – for LT525
9. Motor
   RC445208 – LT525 Standard
   RC445230 – LT525 RTS

xxxx = 4 digit color code.
See Color Chart on page 4
for list of color codes.

MOTORIZED DUAL COUPLED ROLLER SHADE WITH BLOCKOUT SYSTEM

5-267 SERIES – COUPLED UNIT

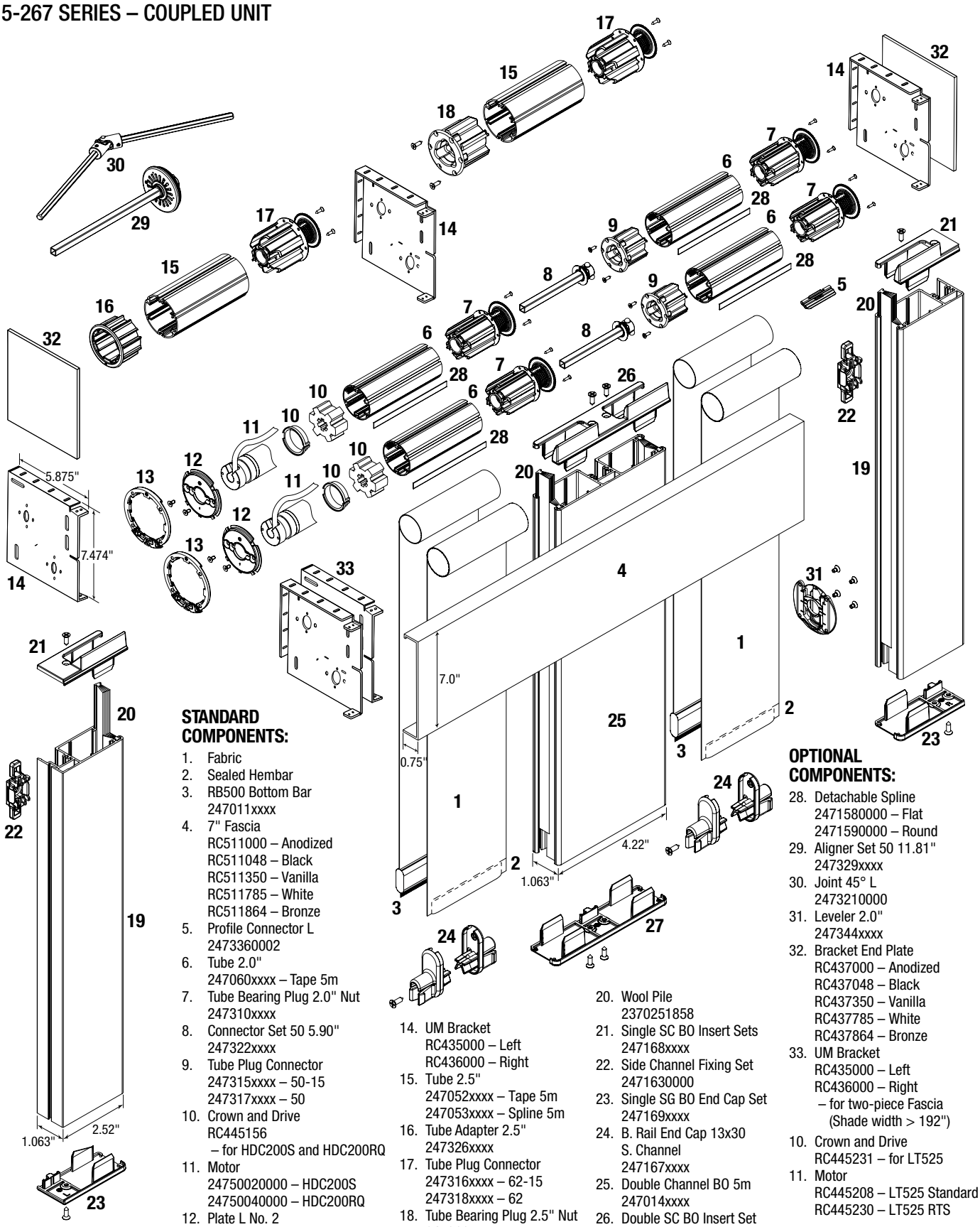

STANDARD COMPONENTS:

1. Fabric
2. Sealed Hembar
3. RB500 Bottom Bar
   247011xxxx
4. 7" Fascia
   RC511000 – Anodized
   RC511048 – Black
   RC511350 – Vanilla
   RC511785 – White
   RC511864 – Bronze
5. Profile Connector L
   2473360002
6. Tube 2.0"
   247060xxxx – Tape 5m
7. Tube Bearing Plug 2.0" Nut
   247310xxxx
8. Connector Set 50 5.90"
   247322xxxx
9. Tube Plug Connector
   247315xxxx – 50-15
   247317xxxx – 50
10. Crown and Drive
    RC445156
    – for HDC200S and HDC200RQ
11. Motor
    24750020000 – HDC200S
    24750040000 – HDC200RQ
12. Plate L No. 2
    2473480003
13. Bracket Adapter 55/75
    247355xxxx
14. UM Bracket
    RC435000 – Left
    RC436000 – Right
15. Tube 2.5"
    247052xxxx – Tape 5m
    247053xxxx – Spline 5m
16. Tube Adapter 2.5"
    247326xxxx
17. Tube Plug Connector
    247316xxxx – 62-15
    247318xxxx – 62
18. Tube Bearing Plug 2.5" Nut
    247311xxxx
19. Single Channel BO 5m
    247012xxxx
20. Wool Pile
    2370251858
21. Single SC BO Insert Sets
    247168xxxx
22. Side Channel Fixing Set
    2471630000
23. Single SG BO End Cap Set
    247169xxxx
24. B. Rail End Cap 13x30
    S. Channel
    247167xxxx
25. Double Channel BO 5m
    247014xxxx
26. Double SC BO Insert Set
    247171xxxx
27. Double SG BO End Cap Set
    247170xxxx

OPTIONAL COMPONENTS:

28. Detachable Spline
    2471580000 – Flat
    2471590000 – Round
29. Aligner Set 50 11.81"
    247329xxxx
30. Joint 45° L
    2473210000
31. Leveler 2.0"
    247344xxxx
32. Bracket End Plate
    RC437000 – Anodized
    RC437048 – Black
    RC437350 – Vanilla
    RC437785 – White
    RC437864 – Bronze
33. UM Bracket
    RC435000 – Left
    RC436000 – Right
    – for two-piece Fascia
    (Shade width > 192")

10. Crown and Drive
    RC445231 – for LT525
11. Motor
    RC445208 – LT525 Standard
    RC445230 – LT525 RTS

xxxx = 4 digit color code. See Color Chart on page 4 for list of color codes.

MOTORS & MOTORIZATION COMPONENTS

MOTORS

Standard Motors

Maintenance-free and permanently lubricated. Features overheating protection, sturdy electrical and mechanical design. Electromagnetic disk brake for a smooth and accurate stop without slippage.

Smart Motors

Quiet AC motors with integrated RQ motor control. Simple control from automation systems with embedded RQ technology, dry contact inputs, and motion and location feedback capabilities to connected systems.

RTS Motors

With the RTS motor, the end user can have wireless control over any motorized window covering via a radio remote control or an RTS wall switch within a range of up to 90 feet in open space and up to 65 feet through two concrete walls.

STANDARD MOTORS	MINIMUM WIDTH
HDC 100S	28"
HDC 200S	31"
LS40	26"
ST50	45"
LT525	35"

SMART MOTORS	MINIMUM WIDTH
HDC 100RQ	28"
HDC 200RQ	31"

RTS MOTORS	MINIMUM WIDTH
ST50 RTS	45"
LT525 RTS	35"

CONTROLS – STANDARD MOTORS

AC CONTROLS – UNIVERSAL MOUNT INDIVIDUAL CONTROL

RQ60AUMHG
(2170000001)

Remotely queryable 1 motor controller. Allows for shades to be individually or group controlled. Total switched load 9.8 amps.

L: 2.25" W: 2.75" H: 1.0"

AC CONTROLS – PLUG & PLAY BOXES

RP60ABMH-SINGLE
(2170000015)

60 Channel Control in “Plug & Play” box for a single AC motor. Kit includes male plug for motor attachment.

L: 5.5" W: 3.25" H: 2.0"

RP60ABMH2-DOUBLE
(2170000016)

60 Channel Control in “Plug & Play” box for two AC motors.

L: 5.5" W: 3.25" H: 2.0"

AC CONTROLS – GROUP CONTROL MOUNTED IN ENCLOSURE

ISO4B
(2170000021)

ISO4B allows user to switch up to 4 AC motors from any switched source. Can be daisychained to accommodate up to 12 AC motors. Customized panels available for additional motors.

L: 8.0" W: 8.0" H: 4.0"

MOTORIZATION COMPONENTS

POWER CORDS

	MODEL	DESCRIPTION
	LT CABLE	Available with 4 wire (Standard Motors) and 3 wire (RTS) and with plug attached. Sizes 3 ft, 6 ft, 12 ft, 18 ft, and 24 ft.

SWITCHES – STANDARD MOTORS

	MODEL	DESCRIPTION
	RP BUS KEYPAD K6ST **(2170000080)**	Keypad (Wall Switch) for operating RPs or RQs on channels 1 through 6. System programming unavailable.
	RP BUS KEYPAD K24ST **(2170000079)**	Keypad (Wall Switch) for operating RPs or RQs on channels 1 through 24 and ALL. Fully functional programming available.
	MAINTAINED ROCKER SWITCH **(RC 445050 WHITE)** **(RC 445064 IVORY)**	Provides easy control of all types of motorized window coverings.
	KEY SWITCH **(RC 445126 MOMENTARY)** **(RC 445127 MAINTAINED)**	Protected by a tamper-proof cover that cannot be removed without inserting the key. Includes heavy duty and light models with either momentary or maintained operation.
	MAINTAINED PADDLE SWITCH **(RC 242101 WHITE)** **(RC 242329 IVORY)**	Designed for AC motors.

SWITCHES – RTS MOTORS

	MODEL	DESCRIPTION
	RTS SWITCH **(RC 445135 SINGLE CHANNEL)** **(RC 445136 5-CHANNEL)**	The RTS Switch (single or five channel) is a wireless radio transmitter. **L: 4.5" W: 2.75" D: 1.25"**

MOTORIZATION COMPONENTS

REMOTE TRANSMITTERS – STANDARD MOTORS

	MODEL	DESCRIPTION
	T6S DUAL 433 **(2170000055)**	IR & RF Transmitter for operating RPs or RQs on channels 1 through 6.
	T24S DUAL 433 **(2170000054)**	IR & RF Transmitter for operating and programming RPs or RQs on channels 1 through 24.

REMOTE TRANSMITTERS – RTS MOTORS

	MODEL	DESCRIPTION
	TELIS **(RC445069 – SINGLE CHANNEL)** **(RC445070 – 5 CHANNEL)**	Hand held remotes. 1 or 5 channel for operating RTS motors.

AUTOMATION COMMUNICATION

	MODEL	DESCRIPTION
	RQ BRIDGE **(2170000003)**	Serial Bridge to communicate between automation systems and RQ60 motor controllers.
	PSIB **(2170000124)**	Interface switch for dry contact interface.
	RS232 ADAPTER **(2170000166)**	Plugs into the serial port of any automation system or building management system.

IR RECEIVER EYE

	MODEL	DESCRIPTION
	RE-6S **(2170000097)**	IR Receiver Eye on 6 ft. modular cable.
	REB V2 **(2170000100)**	IR Receiver Eye in white, wall mount case. Modern styling and construction. **L: 2.1" W: 1.75" H: 1.1"**

MOTORIZATION COMPONENTS

RF RECEIVER

	MODEL	DESCRIPTION
	RR433 V2 **(2170000095)**	433MHz Radio Receiver module complete with white plastic enclosure and external antenna. Programmable pairing up to 5 transmitters. **L: 3.8" W: 3.8"**

SENSORS

	MODEL	DESCRIPTION
	LTSEN INT V2 **(2170000120)**	Sun sensor installed in an interior box. **L: 2.1" W: 1.75" H: 1.1"**
	PSSW **(2170000125)**	Programmable Switch Sun and Wind Sensor control unit.
	LCD DIGITAL TIMER **(2170000118)**	LCD digital clock that provides seven timed actions per day; compatible with all standard motors.
	TIMER **(RC445129)**	Wireless digital timer compatible with all RTS motors. Includes built-in Sun Sensor. **L: 3.125" W: 3.125" H: 1"**

PLUGS

	MODEL	DESCRIPTION
	MPS **(2170000234)**	AC Motor Plug Set. Two part set for use as a 4-wire disconnect of AC motors. **L: 4.25"**
	WEP **(2170000177)**	Wall Entry Plate. Kit comes complete with: single gang cover plate – white only with two screws. 90° 4-conductor UL plug, male plug for motor wire, tool (not required to assemble) and strain relief.

Customization available for AC controls, sun and wind variables, automation systems, and building management systems. Contact Hunter Douglas Contract for assistance.

WIRING DIAGRAMS

LS40 / ST50 STANDARD / LT525 STANDARD / HDC 100S / HDC 200S

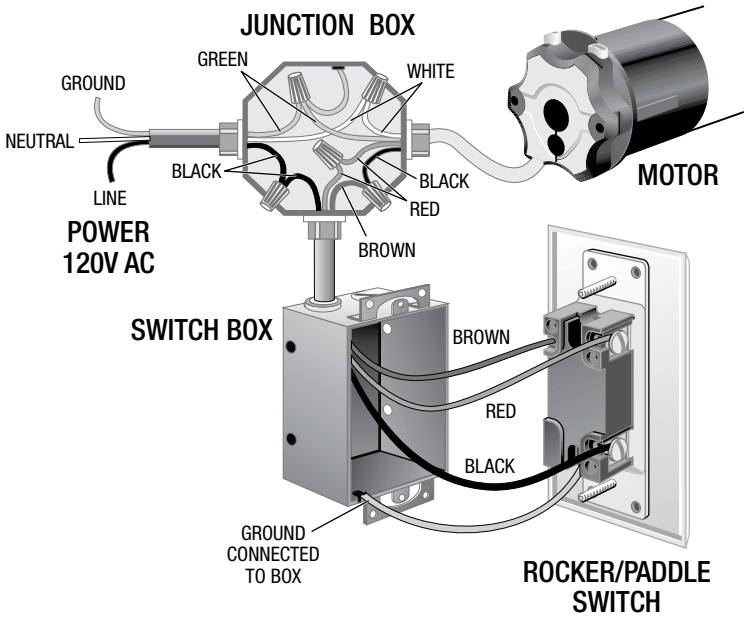

ONE MOTOR
SINGLE POLE SWITCH

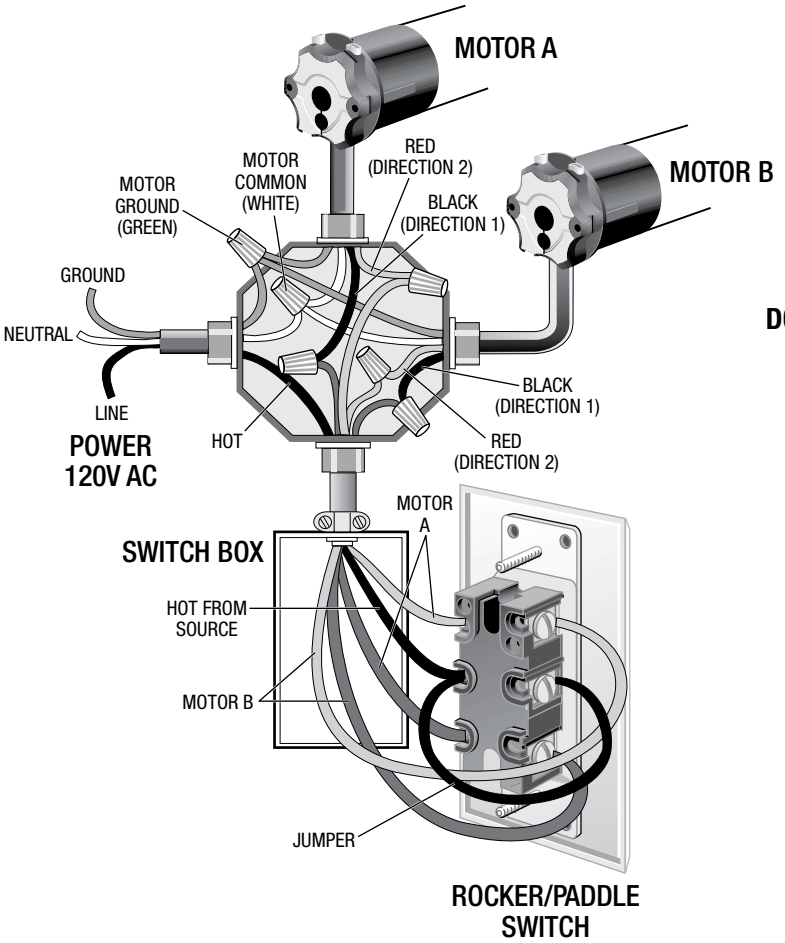

TWO MOTORS
DOUBLE POLE SWITCH

WIRING DIAGRAMS

HDC 100RQ AND HDC 200RQ

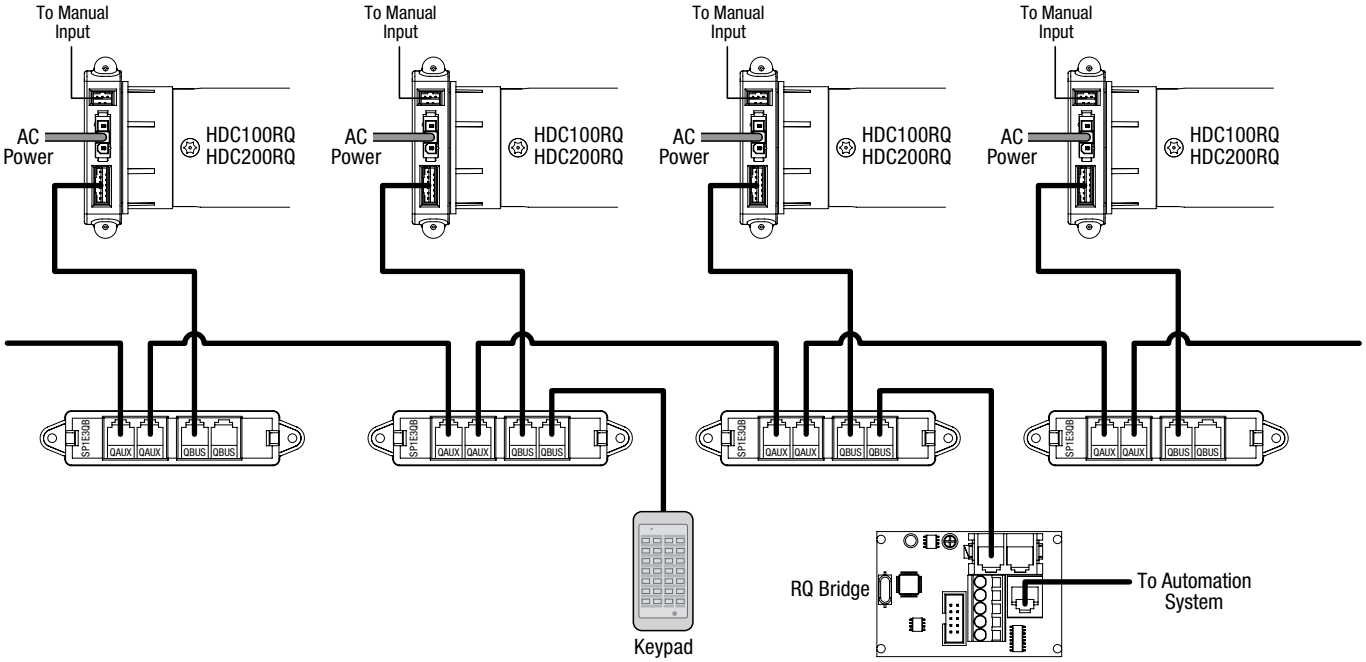

GENERAL WIRING MOTOR CONTROLLERS

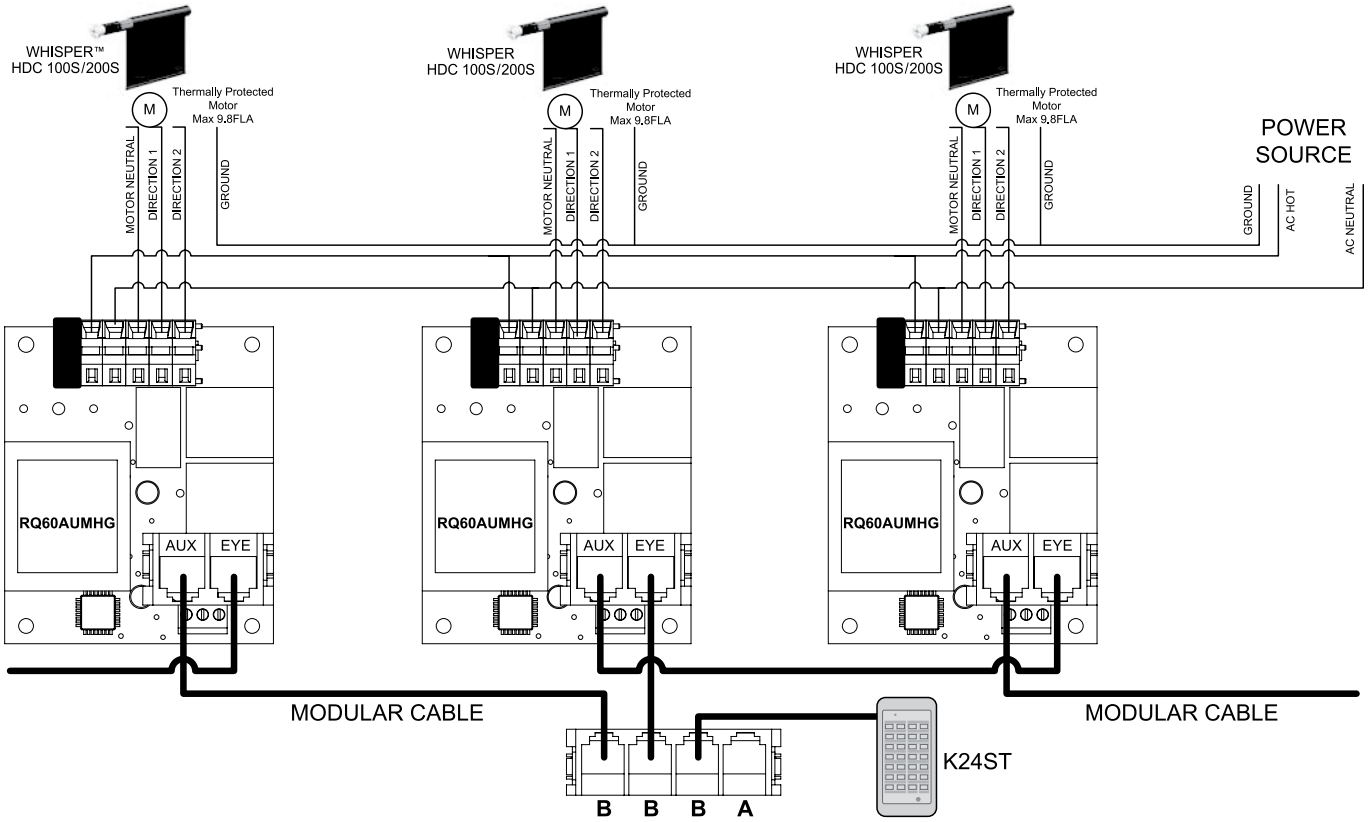

MOTORIZATION COMPONENTS & MOTOR COMPATIBILITY CHART

	AVAILABLE MOTORS						
MOTORIZATION COMPONENT	**LS40 STD**	**ST50 STD**	**LT525 STD**	**WHISPER™ HDC 100S HDC 100RQ**	**WHISPER HDC 200S HDC 200RQ**	**ST50 RTS**	**LT525 RTS**
RQ60AUMHG – Universal mount individual control motor controller	●	●	●	●	●		
ISO4B – Enclosed control to switch up to 4 motors	●	●	●	●	●		
RP60ABMH – Plug & play control box-single motor	●	●	●	●	●		
RP60ABMH2 – Plug & play control box-two motors	●	●	●	●	●		
LT CABLE – Power cord with 3 or 4 wires	●	●	●	●	●		
RP BUS K6ST – Wall switch for operating RPs/RQs channels 1-6	●	●	●	●	●		
RP BUS K24ST – Wall switch for operating RPs/RQs channels 1-24	●	●	●	●	●		
ROCKER SWITCH – Fingertip control with up, down, & center stop	●	●	●	●	●		
KEY SWITCH – Momentary or maintained operation security switch	●	●	●	●	●		
DECORATOR PADDLE SWITCH – Designed for AC motors	●	●	●	●	●		
RTS SWITCH – Single or four channel wireless radio transmitter						●	●
T6S DUAL 433 – Remote transmitter operating RPs/RQs channels 1-6	●	●	●	●	●		
T24S DUAL 433 – Remote transmitter operating RPs/RQs channels 1-24	●	●	●	●	●		
TELIS REMOTE TRANSMITTER – Used to operate RTS motors						●	●
RQ BRIDGE – To communicate with automation systems	●	●	●	●	●		
RE-6S – Infrared receiving eye on 6 ft. modular cable	●	●	●	●	●		
REB V2 – Infrared receiving eye in a white wall mount case	●	●	●	●	●		
RR433 V2 – Radio receiver programmable with up to 5 transmitters	●	●	●	●	●		
LTSEN INT V2 – Sun sensor installed in an interior box	●	●	●	●	●		
PSSW – Programmable switch sun & wind sensor control unit	●	●	●	●	●		
LCD DIGITAL TIMER – Hard-wired timer for standard motors	●	●	●	●	●		
TIMER – Wireless digital timer compatible with RTS motors						●	●
MPS – AC motor plug set; used as a 4 wire disconnect of AC motors	●	●	●	●	●		
WEP – Wall entry plate 90° 4 conductor UL plug	●	●	●	●	●		

Deduction Charts

DEDUCTION CHARTS

Ordering dimensions versus finished product dimensions.
All deductions/additions are based on customer's IM or OM size.

Manual Clutch Roller Shades (Single Shade)

	Tube Plus Fabric	Finished Shade with Brackets
INSIDE MOUNT (IM)		
1 1/4", 1 1/2" and 2" Tube*	Ordered Width – 1 1/2"	Ordered Width – 1/8"
2" and 2 1/2" Tube**	Ordered Width – 1 5/8"	Ordered Width – 1/8"
Finished Drop	Ordered Drop	+ 1/8"
Fascia	Ordered Width	– 1/8"
OUTSIDE MOUNT (OM)		
1 1/4", 1 1/2" and 2" Tube*	Ordered Width – 1 3/8"	Ordered Width
2" and 2 1/2" Tube**	Ordered Width – 1 1/2"	Ordered Width
Finished Drop	Ordered Drop	+ 1/8"
Fascia	Ordered Width	– 1/8"

*Standard clutch **Heavy duty clutch

Dual Manual Clutch Roller Shades

	Standard Deduction/Addition
INSIDE MOUNT (IM)	
2 1/2" Tube/Fabric	Ordered Width – 1 1/2"
Finished Width	Ordered Width – 1/8"
Finished Drop	Ordered Drop
OUTSIDE MOUNT (OM)	
2 1/2" Tube/Fabric	Ordered Width – 1 3/8"
Finished Width	Ordered Width
Finished Drop	Ordered Drop

Coupled Roller Shades (All)

	Tube Plus Fabric	With Adjuster
INSIDE AND OUTSIDE MOUNT		
1 1/4", 1 1/2" and 2" Tube	Ordered Width – 1 "	Ordered Width – 1 1/4"
2 1/2" Tube	Ordered Width – 1 1/4"	Ordered Width – 1 1/2"

DEDUCTION CHARTS

Ordering dimensions versus finished product dimensions.
All deductions/additions are based on customer's IM or OM size.

3" Blockout Manual Clutch Roller Shades (with Fascia and Side Channels)

	Standard Deduction/Addition	Accepted Tolerances
INSIDE MOUNT (IM)		
1 1/8" Tube/Fabric	Ordered Width – 1 1/2"	± 1/16"
1 1/2" Tube/Fabric	Ordered Width – 1 1/2"	± 1/16"
Side Channel	Ordered Height – 3 3/4"	+ 1/16"
Fascia	Ordered Width – 3/4"	– 1/16"
OUTSIDE MOUNT (OM)		
1 1/8" Tube/Fabric	Ordered Width – 1 3/8"	± 1/16"
1 1/2" Tube/Fabric	Ordered Width – 1 3/8"	± 1/16"
Side Channel	Ordered Height – 3 5/8"	+ 1/16"
Fascia	Ordered Width	– 1/16"

4" Blockout Manual Clutch Roller Shades (with Fascia and Side Channels)

Heavy Duty Bracket Type 5-210	Standard Deduction/Addition	Accepted Tolerances
INSIDE MOUNT (IM)		
2" and 2 1/2" Tube	Ordered Width – 1 5/8"	± 1/16"
Fabric	Tube Width – 3/4"	± 1/16"
Side Channel	Ordered Height – 4 7/8"	+ 1/16"
Fascia	Ordered Width – 3/4"	– 1/16"
OUTSIDE MOUNT (OM)		
2" and 2 1/2" Tube	Ordered Width – 1 1/2"	± 1/16"
Fabric	Tube Width – 3/4"	± 1/16"
Side Channel	Ordered Height – 4 3/4"	+ 1/16"
Fascia	Ordered Width – 5/8"	– 1/16"

DEDUCTION CHARTS

Ordering dimensions versus finished product dimensions.
All deductions/additions are based on customer's IM or OM size.

Manual Roller Shade Extruded Pocket

Pocket Size	Pocket Length	Closure Length	Closure Mount Strip
INSIDE MOUNT (IM)			
5 1/4"	Ordered Width – 3/8"	Ordered Width – 1"	Ordered Width – 1/8"
9" (Dual Shade)	Ordered Width – 1/2"	Ordered Width – 1"	Ordered Width – 1/8"
OUTSIDE MOUNT (OM)			
5 1/4"	Ordered Width – 1/4"	Ordered Width – 1"	Ordered Width
9" (Dual Shade)	Ordered Width – 5/8"	Ordered Width – 1"	Ordered Width

Manual Crank Roller Shades (Single Shade)

	Tube Plus Fabric	Finished Shade with Brackets
INSIDE MOUNT (IM)		
1 1/4", 1 1/2" and 2" Tube*	Ordered Width – 1 3/4"	Ordered Width – 1/8"
2" and 2 1/2" Tube**	Ordered Width – 2 1/8"	Ordered Width – 1/8"
Finished Drop	Ordered Drop	+ 1/8"
Fascia	Ordered Width	– 1/8"
OUTSIDE MOUNT (OM)		
1 1/4", 1 1/2" and 2" Tube*	Ordered Width – 1 5/8"	Ordered Width
2" and 2 1/2" Tube**	Ordered Width – 2"	Ordered Width
Finished Drop	Ordered Drop	+ 1/8"
Fascia	Ordered Width	– 1/8"

*Standard clutch **Heavy duty clutch

DEDUCTION CHARTS

Ordering dimensions versus finished product dimensions.
All deductions/additions are based on customer's IM or OM size.

4" Blockout Manual Crank Roller Shades (with Fascia and Side Channels)

Heavy Duty Bracket Type 5-210	Standard Deduction/Addition	Accepted Tolerances
INSIDE MOUNT (IM)		
2" and 2½" Tube	Ordered Width – 2 1/8"	± 1/16"
Fabric	Tube Width – 3/4"	± 1/16"
Side Channel	Ordered Height – 4 7/8"	+ 1/16"
Fascia	Ordered Width – 3/4"	– 1/16"
OUTSIDE MOUNT (OM)		
2" and 2½" Tube	Ordered Width – 2"	± 1/16"
Fabric	Tube Width – 3/4"	± 1/16"
Side Channel	Ordered Height – 4 3/4"	+ 1/16"
Fascia	Ordered Width – 5/8"	– 1/16"

Motorized Shades (Single Shade)

Motor Model	Tube Plus Fabric	Finished Overall Width	Finished Drop
INSIDE MOUNT (IM)			
ST50 STD & RTS	Ordered Width – 1 7/8"	Ordered Width – 1/8"	Ordered Drop ± 1/8"
LS40	Ordered Width – 1 5/8"	Ordered Width – 1/8"	Ordered Drop ± 1/8"
LT525 STD & RTS	Ordered Width – 1 7/8"	Ordered Width – 1/8"	Ordered Drop ± 1/8"
HDC 100S/RQ & 200S/RQ	Ordered Width – 1 3/4"	Ordered Width – 1/8"	Ordered Drop ± 1/8"
OUTSIDE MOUNT (OM)			
ST50 STD & RTS	Ordered Width – 1 3/4"	Ordered Width	Ordered Drop ± 1/8"
LS40	Ordered Width – 1 1/2"	Ordered Width	Ordered Drop ± 1/8"
LT525 STD & RTS	Ordered Width – 1 3/4"	Ordered Width	Ordered Drop ± 1/8"
HDC 100S/RQ & 200S/RQ	Ordered Width – 1 5/8"	Ordered Width	Ordered Drop ± 1/8"

DEDUCTION CHARTS

Ordering dimensions versus finished product dimensions.
All deductions/additions are based on customer's IM or OM size.

Motorized Shades with Fascia

Motor Model	Tube Plus Fabric	Finished Overall Width	Finished Drop
INSIDE MOUNT (IM)			
ST50 STD & RTS	Ordered Width – 1 7/8"	Ordered Width – 1/8"	Ordered Drop ± 1/8"
LS40	Ordered Width – 1 5/8"	Ordered Width – 1/8"	Ordered Drop ± 1/8"
LT525 STD & RTS	Ordered Width – 1 7/8"	Ordered Width – 1/8"	Ordered Drop ± 1/8"
HDC 100S/RQ & 200S/RQ	Ordered Width – 1 3/4"	Ordered Width – 1/8"	Ordered Drop ± 1/8"
OUTSIDE MOUNT (OM)			
ST50 STD & RTS	Ordered Width – 1 3/4"	Ordered Width	Ordered Drop ± 1/8"
LS40	Ordered Width – 1 1/2"	Ordered Width	Ordered Drop ± 1/8"
LT525 STD & RTS	Ordered Width – 1 3/4"	Ordered Width	Ordered Drop ± 1/8"
HDC 100S/RQ & 200S/RQ	Ordered Width – 1 5/8"	Ordered Width	Ordered Drop ± 1/8"

4" Blockout Motorized Roller Shades (with Fascia and Side Channels)

Motor Models ST50 STD & RTS	Standard Deduction/Addition	Accepted Tolerances
INSIDE MOUNT (IM)		
2" and 2 1/2" Tube	Ordered Width – 1 7/8"	± 1/16"
Fabric	Tube Width – 3/4"	± 1/16"
Side Channel	Ordered Height – 4 7/8"	+ 1/16"
Fascia	Ordered Width – 3/4"	– 1/16"
OUTSIDE MOUNT (OM)		
2" and 2 1/2" Tube	Ordered Width – 1 3/4"	± 1/16"
Fabric	Tube Width – 3/4"	± 1/16"
Side Channel	Ordered Height – 4 3/4"	+ 1/16"
Fascia	Ordered Width – 5/8"	– 1/16"

DEDUCTION CHARTS

Ordering dimensions versus finished product dimensions.
All deductions/additions are based on customer's IM or OM size.

4" Blockout Motorized Roller Shades (with Fascia and Side Channels)

Motor Models LS40 and LT525 STD & RTS	Standard Deduction/Addition	Accepted Tolerances
INSIDE MOUNT (IM)		
2" and 2½" Tube	Ordered Width – 1 7/8"	± 1/16"
Fabric	Tube Width – 3/4"	± 1/16"
Side Channel	Ordered Height – 4 7/8"	+ 1/16"
Fascia	Ordered Width – 3/4"	– 1/16"
OUTSIDE MOUNT (OM)		
2" and 2½" Tube	Ordered Width – 1 3/4"	± 1/16"
Fabric	Tube Width – 3/4"	± 1/16"
Side Channel	Ordered Height – 4 3/4"	+ 1/16"
Fascia	Ordered Width – 5/8"	– 1/16"

4" Blockout Motorized Roller Shades (with Fascia and Side Channels)

Motor Models HDC 100S & 100RQ and HDC 200S & 200RQ	Standard Deduction/Addition	Accepted Tolerances
INSIDE MOUNT (IM)		
2" and 2½" Tube	Ordered Width – 1 3/4"	± 1/16"
Fabric	Tube Width – 3/4"	± 1/16"
Side Channel	Ordered Height – 4 7/8"	+ 1/16"
Fascia	Ordered Width – 3/4"	– 1/16"
OUTSIDE MOUNT (OM)		
2" and 2½" Tube	Ordered Width – 1 5/8"	± 1/16"
Fabric	Tube Width – 3/4"	± 1/16"
Side Channel	Ordered Height – 4 3/4"	+ 1/16"
Fascia	Ordered Width – 5/8"	– 1/16"

DEDUCTION CHARTS

Ordering dimensions versus finished product dimensions.
All deductions/additions are based on customer's IM or OM size.

5 1/4" Pocket (with Side and Bottom Channels)

	Standard Deduction/Addition	Accepted Tolerances
INSIDE MOUNT (IM)		
Side Channel & Wool Pile	Ordered Width – 5 3/8"	+ 1/16"
Bottom Channel & Wool Pile	Ordered Width – 5"	+ 1/16"
OUTSIDE MOUNT (OM)		
Side Channel & Wool Pile	Ordered Width – 5 3/8"	+ 1/16"
Bottom Channel & Wool Pile	Ordered Width – 4 7/8"	+ 1/16"

9" Pocket (with Side and Bottom Channels)

	Standard Deduction/Addition	Accepted Tolerances
INSIDE MOUNT (IM)		
Side Channel & Wool Pile	Ordered Width – 9 1/8"	+ 1/16"
Bottom Channel & Wool Pile	Ordered Width – 5"	+ 1/16"
OUTSIDE MOUNT (OM)		
Side Channel & Wool Pile	Ordered Width – 9 1/8"	+ 1/16"
Bottom Channel & Wool Pile	Ordered Width – 4 7/8"	+ 1/16"

Motorized Roller Shade Extruded Pocket

Pocket Size	Pocket Length	Closure Length	Closure Mount Strip
INSIDE MOUNT (IM)			
5 1/4"	Ordered Width – 3/8"	Ordered Width – 1/2"	Ordered Width – 1/8"
9" (Dual Shade)	Ordered Width – 1/2"	Ordered Width – 5/8"	Ordered Width – 1/8"
OUTSIDE MOUNT (OM)			
5 1/4"	Ordered Width – 1/4"	Ordered Width – 3/8"	Ordered Width
9" (Dual Shade)	Ordered Width – 3/8"	Ordered Width – 1/2"	Ordered Width

For additional deduction information related to Coupled Shades, Dual Coupled Shades, and Banded Shades, contact Hunter Douglas Contract.

Fabric Selector

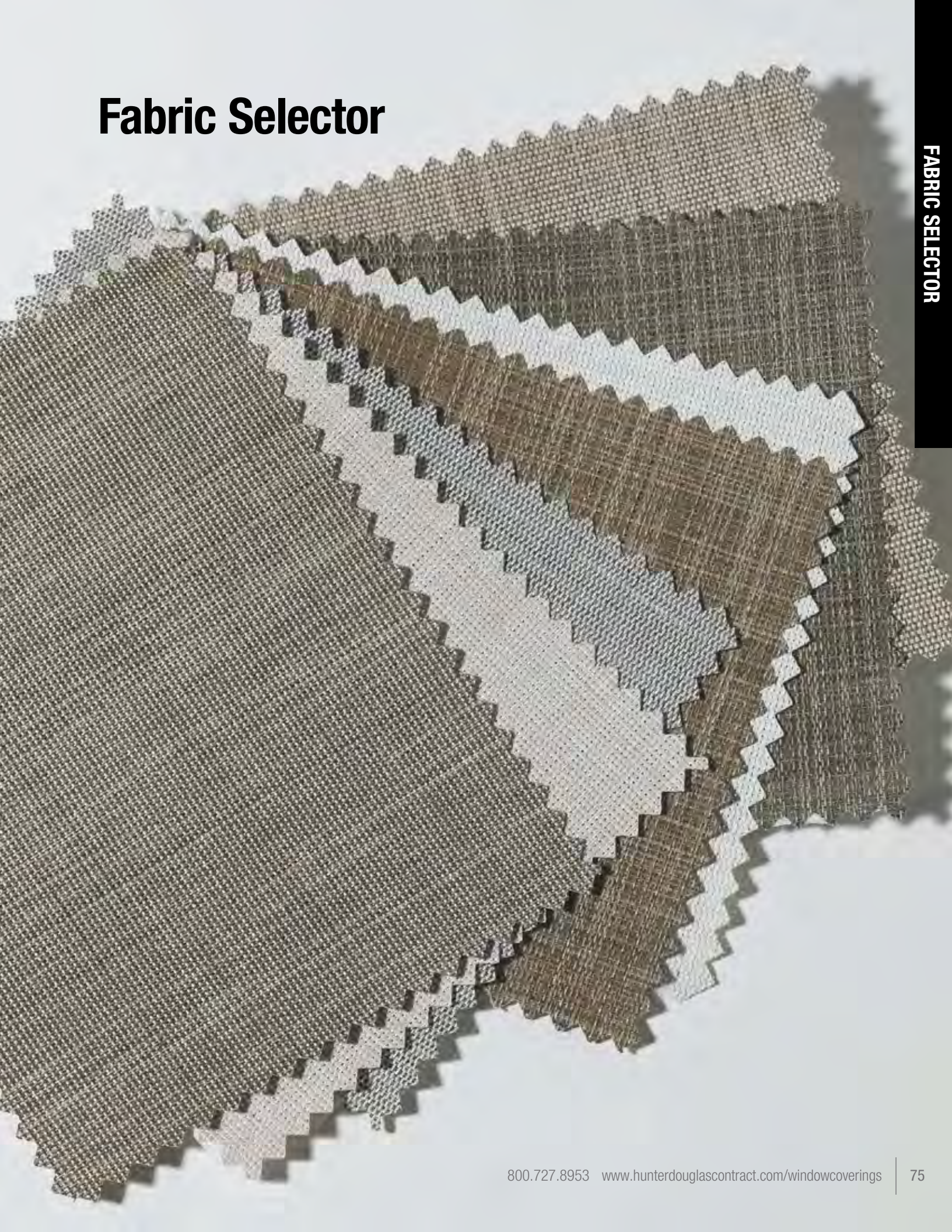

FABRIC COLLECTION INDEX

FABRIC NAME	MAX WIDTH*	CONTENT	OPENNESS FACTOR	PAGE
GreenScreen X-Lite	118"	100% polyester (PVC-free)	0%	78
GreenScreen Eco	118"	100% polyester (PVC-free)	3%	79
Flocke	78"	51% acrylic, 42% fiberglass, 7% cotton flocked backing	0%	80
Morocco	72"	100% fiberglass with vinyl laminates	0%	81
Pima	72"	100% cotton with vinyl coating	0%	82
Sheerweave 7000	94"	100% polyester with acrylic foamed backing (PVC-free)	0%	83
Sheerweave 7100	72"	PVC coated fiberglass laminated with 2-ply 100% PVC blackout film	0%	84
E Screen 7501	98"	64% vinyl, 36% fiberglass	1%	85
GlacierScreen HD2001	118"	78% vinyl, 22% polyester	1%	86
Sheerweave 2500	98"	65% PVC, 35% fiberglass	1%	87
Sheerweave 2701	98"	64% PVC, 36% fiberglass	1%	88
Sheerweave 4800	96"	76% PVC on polyester, 24% polyester	1%	89
E Screen 7503	98"	64% vinyl, 36% fiberglass	3%	90
GlacierScreen HD1003	118"	78% vinyl, 22% polyester	3%	91
GlacierScreen HD2003	118"	78% vinyl, 22% polyester	3%	92
M Screen 8503	98"	64% vinyl, 36% fiberglass	3%	93
Sheerweave 2410	98"	65% PVC on fiberglass, 35% fiberglass	3%	95
Sheerweave 2703	98"	64% PVC, 36% fiberglass	3%	96
Sheerweave 4400	98"	75% PVC on polyester, 25% polyester	3%	97
Sheerweave 4600	98"	78% PVC on polyester, 22% polyester	3%	98
Sheerweave 4650	98"	83% PVC on polyester, 17% polyester	3%	99
Star 2115	98"	66% PVC, 34% fiberglass	4%	100
E Screen 7505	96"	64% vinyl, 36% fiberglass	5%	101
GlacierScreen HD1005	118"	78% vinyl, 22% polyester	5%	102
M Screen 8505	98"	64% vinyl, 36% fiberglass	5%	103
M Screen Deco	98"	64% vinyl, 36% fiberglass	5%	105
Sheerweave 2000	96"	63% PVC on fiberglass, 37% fiberglass	5%	106
Sheerweave 2390	98"	65% PVC on fiberglass, 35% fiberglass	5%	107
Sheerweave 2705	98"	64% PVC, 36% fiberglass	5%	108
Sheerweave 4000	98"	75% PVC on polyester, 25% polyester	5%	109
Sheerweave 4500	98"	83% PVC on polyester, 17% polyester	5%	110
Sheerweave 4550	98"	83% PVC on polyester, 17% polyester	5%	111
Sheerweave 5000	74"	72% PVC on polyester, 28% polyester	5% – 10%	112
E Screen 7510	98"	64% vinyl, 36% fiberglass	10%	113
GlacierScreen HD1010	118"	78% vinyl, 22% polyester	10%	114
New Orleans	98"	66% PVC, 34% fiberglass	10%	115
Sheerweave 2100	96"	63% PVC on fiberglass, 37% fiberglass	10%	116
Sheerweave 2360	98"	63% PVC on fiberglass, 37% fiberglass	10%	117
Sheerweave 2710	98"	64% PVC, 36% fiberglass	10%	118
Sheerweave 4100	98"	75% PVC on polyester, 25% polyester	10%	119
Sheerweave 3000	96"	65% PVC on fiberglass, 35% fiberglass; 69% PVC on polyester, 31% polyester	14%	120

For additional fabric specification and fenestration information, see individual fabric selector pages.

* Some fabrics/colors may be available in wider widths. Contact Hunter Douglas Contract at 800.727.8953 or visit our website at www.hunterdouglascontract.com/window coverings for complete maximum fabric width information.

Note: The digital colors throughout this catalog may vary from the actual material. Call 800.727.8953 for fabric samples.

ADDITIONAL FABRIC INFORMATION

FABRIC NAME	MIN WIDTH	MAX WIDTH*	MAX HEIGHT	MAX WIDTH TURNED	MAX HEIGHT TURNED WITHOUT SEAM	MAX WIDTH RAILROAD	MAX HEIGHT RAILROAD WITH SEAM	WEIGHT (OZ/YD²)	FABRIC CAN BE SEALED (HEMBARS) Y/N
GreenScreen X-Lite	12"	118"	192"	192"	104"	NA	NA	8.85	N**
GreenScreen Eco	12"	118"	192"	192"	104"	NA	NA	4.71	N**
Flocke	12"	78"	192"	192"	64"	192"	144"	12.3–14.7	Y
Morocco	12"	72"	192"	192"	58"	192"	144"	14	Y
Pima	12"	72"	192"	NA	NA	NA	NA	6	N**
Sheerweave 7000	12"	94"	192"	192"	80"	192"	144"	10	Y
Sheerweave 7100	12"	72"	192"	192"	58"	192"	144"	19.8	Y
E Screen 7501	12"	98"	192"	192"	84"	192"	144"	13.3	Y
GlacierScreen HD2001	12"	118"	192"	192"	70"	192"	144"	14.9	Y
Sheerweave 2500	12"	98"	192"	192"	84"	192"	144"	16.1	Y
Sheerweave 2701	12"	98"	192"	192"	84"	192"	144"	14.6	Y
Sheerweave 4800	12"	96"	192"	144"	82"	144"	144"	18.5	Y
E Screen 7503	12"	98"	192"	192"	84"	192"	144"	12.3	Y
GlacierScreen HD1003	12"	118"	192"	192"	70"	192"	144"	14.6	Y
GlacierScreen HD2003	12"	118"	192"	192"	70"	192"	144"	13.3	Y
M Screen 8503	12"	98"	192"	192"	84"	192”	144"	12.7	Y
Sheerweave 2410	12"	98"	192"	192"	84"	192"	144"	13.9	Y
Sheerweave 2703	12"	98"	192"	192"	84"	192"	144"	14	Y
Sheerweave 4400	12"	98"	192"	144"	84"	144"	144"	20.7	Y
Sheerweave 4600	12"	98"	192"	144"	84"	144"	144"	17.4	Y
Sheerweave 4650	12"	98"	192"	144"	84"	144"	144"	13.3	Y
Star 2115	12"	98"	192"	192"	84"	192"	144"	12.38	Y
E Screen 7505	12"	96"	192"	192"	82"	192"	144"	12.01	Y
GlacierScreen HD1005	12"	118"	192"	192"	70"	192"	144"	14.6	Y
M Screen 8505	12"	98"	192"	192"	84"	192"	144"	11.9	Y
M Screen Deco	12"	98"	192"	192"	84"	192"	144"	11.3	Y
Sheerweave 2000	12"	96"	192"	192"	82"	192"	144"	14.26	Y
Sheerweave 2390	12"	98"	192"	192"	84"	192"	144"	11.9	Y
Sheerweave 2705	12"	98"	192"	192"	84"	192"	144"	11.8	Y
Sheerweave 4000	12"	98"	192"	144"	84"	144"	144"	19.2	Y
Sheerweave 4500	12"	98"	192"	144"	84"	144"	144"	14.4	Y
Sheerweave 4550	12"	98"	192"	144"	84"	144"	144"	12.5	Y
Sheerweave 5000	12"	74"	192"	192"	60"	192"	144"	14.5	Y
E Screen 7510	12"	98"	192"	192"	84"	192"	144"	10.3	Y
GlacierScreen HD1010	12"	118"	192"	192"	70"	192"	144"	16.3	Y
New Orleans	12"	98"	192"	192"	84"	192"	144"	11.79	Y
Sheerweave 2100	12"	96"	192"	192"	82"	192"	144"	12.4	Y
Sheerweave 2360	12"	98"	192"	192"	84"	192"	144"	10.5	Y
Sheerweave 2710	12"	98"	192"	192"	84"	192"	144"	10.4	Y
Sheerweave 4100	12"	98"	192"	144"	84"	144"	144"	17.5	Y
Sheerweave 3000	12"	96"	192"	192"	82"	192"	144"	13.46	Y

* Some fabrics/colors may be available in wider widths. Contact Hunter Douglas Contract at 800.727.8953 or visit our website at www.hunterdouglascontract.com/window coverings for complete maximum fabric width information.

** Fabric-covered bottom bar, flat or oval.

The fenestration data provided in this fabric selector are derived from information provided by Hunter Douglas' vendors and/or testing conducted by Hunter Douglas or its vendors. Test methods used are intended to demonstrate the qualities and performance of the specific fabric samples tested, and the data may not reflect or predict the qualities or performance of the fabrics under actual conditions. In addition, tests may not have been conducted by certified or governmentally approved testing facilities and, accordingly, the results may vary from those that would be obtained at such certified or approved facilities. Hunter Douglas assumes no liability to its customer or any other person or entity whatsoever arising out of any loss or damage suffered or sustained, or for any amounts required to be paid, as a result of the performance (or nonperformance) of the fabric under actual conditions.

GreenScreen X-Lite | 0% openness

WHITE

ANTIQUE WHITE

BEIGE

GRAY

DARK GRAY

BRONZE

CHARCOAL

Specifications

MAX. FABRIC WIDTH: 118"
ROLL LENGTH: 27.3 yd
FABRIC WEIGHT: 8.85 oz/yd²
FABRIC THICKNESS: 0.015"

OPENNESS FACTOR: 0%
COMPOSITION: 100% polyester (PVC-free); polyurethane finish
FIRE CLASSIFICATION: NFPA 701-99 (small scale) M1, B1

	SOLAR OPTICAL PROPERTIES						SHADING COEFFICIENT (INTERNAL)		
							SINGLE		
COLOR	**TS**	**RS**	**AS**	**Tuv**	**Tv**	**O-F**	**1/8CL**	**1/4CL**	**1/4HA**
White	0	61	38	0	0	0	0.32	0.32	0.31
Antique White	0	61	38	0	0	0	0.32	0.32	0.31
Beige	0	61	38	0	0	0	0.32	0.32	0.31
Gray	0	61	38	0	0	0	0.32	0.32	0.31
Dark Gray	0	61	38	0	0	0	0.32	0.32	0.31
Bronze	0	61	38	0	0	0	0.32	0.32	0.31
Charcoal	0	61	38	0	0	0	0.32	0.32	0.31

TS Solar Transmittance
RS Solar Reflectance
AS Solar Absorptance
Tuv Ultraviolet Transmittance
TV Visual Transmittance
O-F Openness Factor

1/8 CL 1/8" Clear Glass
1/4 CL 1/4" Clear Glass
1/4 HA 1/4" Heat Absorbing Glass

- The solar optical properties are used to calculate the shading coefficient.
- The shading coefficient represents the percentage of solar heat gain that is transmitted to the interior through the glass and shading system. Darker colors provide maximum glare reduction and visibility.

GreenScreen Eco | 3% openness

WHITE

LINEN

PEARL / LINEN

PEARL

PEWTER

CHARCOAL / BRONZE

CHARCOAL

Specifications

MAX. FABRIC WIDTH:	118"	OPENNESS FACTOR:	3%
ROLL LENGTH:	54.6 yd	COMPOSITION:	100% polyester (PVC-free)
FABRIC WEIGHT:	4.71 oz/yd^2	FIRE CLASSIFICATION:	NFPA 701-99 (small scale)
FABRIC THICKNESS:	0.015"		

	SOLAR OPTICAL PROPERTIES						SHADING COEFFICIENT (INTERNAL)		
							SINGLE		
COLOR	**TS**	**RS**	**AS**	**Tuv**	**Tv**	**O-F**	**1/8CL**	**1/4CL**	**1/4HA**
White	47	44	9	15	39	3	0.57	0.55	0.44
Linen	45	42	13	14	35	4	0.58	0.56	0.44
Pearl/Linen	39	39	22	13	26	4	0.58	0.56	0.44
Pearl	39	39	22	13	27	3	0.58	0.56	0.44
Pewter	30	32	38	8	11	3	0.61	0.58	0.45
Charcoal/Bronze	24	28	48	5	7	3	0.62	0.59	0.46
Charcoal	25	29	46	6	6	3	0.62	0.59	0.46

TS Solar Transmittance
RS Solar Reflectance
AS Solar Absorptance
Tuv Ultraviolet Transmittance
TV Visual Transmittance
O-F Openness Factor

1/8 CL 1/8" Clear Glass
1/4 CL 1/4" Clear Glass
1/4 HA 1/4" Heat Absorbing Glass

- The solar optical properties are used to calculate the shading coefficient.
- The shading coefficient represents the percentage of solar heat gain that is transmitted to the interior through the glass and shading system. Darker colors provide maximum glare reduction and visibility.

Flocke | 0% openness

BLANC

CORALINE

SAHEL

ANGORA

MISSISSIPPI

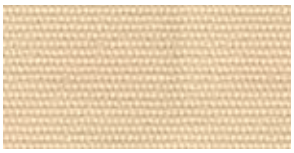
BEIGE

CHARTREUX

LOUTRE

CUIVRE

PETROLE

NOIR

Specifications

MAX. FABRIC WIDTH: 78"
ROLL LENGTH: 30 yd
FABRIC WEIGHT: 12.3 oz/yd² – 606, 614
14.7 oz/yd² – 600, 623, 618, 603, 625, 626, 608, 609, 615
FABRIC THICKNESS: 0.020" – 606, 614
0.022" – 600, 623, 618, 603, 625, 626, 608, 609, 615
OPENNESS FACTOR: 0% (total blackout)

COMPOSITION: 51% acrylic, 42% fiberglass, 7% cotton flocked backing
UV BLOCKAGE: 100%
FIRE CLASSIFICATION: NFPA 701 (small scale) California Title 19, ASTME-84, M1, B1
BREAKING STRENGTH: warp 305 lbs
weft 197 lbs
STRETCH: warp <5%
weft <5%

	SOLAR OPTICAL PROPERTIES				SHADING COEFFICIENT		
					SINGLE		
COLOR	**TS**	**RS**	**AS**	**TV**	**1/8CL**	**1/4CL**	**1/4HA**
BLANC	0	69	31	0	0.27	0.28	0.29
NOIR	0	68	32	0	0.28	0.28	0.29
ALL OTHER COLORS	*	*	*	*	*	*	*

***** *Test results not yet available.*

TS Solar Transmittance
RS Solar Reflectance
AS Solar Absorptance
TV Visual Transmittance

1/8 CL 1/8" Clear Glass
1/4 CL 1/4" Clear Glass
1/4 HA 1/4" Heat Absorbing Glass

- The solar optical properties are used to calculate the shading coefficient.
- The shading coefficient represents the percentage of solar heat gain that is transmitted to the interior through the glass and shading system. Darker colors provide maximum glare reduction and visibility.

Morocco | 0% openness

BRIGHT WHITE

LIGHT CREAM

BONE CHINA

LIGHT COCOA

BUCK WHEAT

ARCTIC SILVER

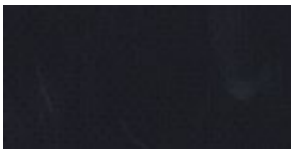
MIDNIGHT

Specifications

MAX. FABRIC WIDTH:	72"
ROLL LENGTH:	30 yd
FABRIC WEIGHT:	14 oz/yd^2
FABRIC THICKNESS:	0.012"
OPENNESS FACTOR:	0% (room darkening)

COMPOSITION:	100% fiberglass with vinyl laminates
FIRE CLASSIFICATION:	NFPA 701, CCC-C-521E (type 11 fiberglass) A-A150

	SOLAR OPTICAL PROPERTIES				SHADING COEFFICIENT		
					SINGLE		
COLOR	**TS**	**RS**	**AS**	**TV**	**1/8CL**	**1/4CL**	**1/4HA**
ALL COLORS	*	*	*	*	*	*	*

***** *Test results not yet available.*

TS Solar Transmittance
RS Solar Reflectance
AS Solar Absorptance
TV Visual Transmittance

1/8 CL 1/8" Clear Glass
1/4 CL 1/4" Clear Glass
1/4 HA 1/4" Heat Absorbing Glass

- The solar optical properties are used to calculate the shading coefficient.
- The shading coefficient represents the percentage of solar heat gain that is transmitted to the interior through the glass and shading system. Darker colors provide maximum glare reduction and visibility.

Pima | 0% openness

BRIGHT WHITE

LINEN

BAMBOO

BEACH SHELLS

BARLEY

Specifications

MAX. FABRIC WIDTH:	72"
ROLL LENGTH:	30 yd
FABRIC WEIGHT:	6 oz/yd^2
FABRIC THICKNESS:	0.010"
OPENNESS FACTOR:	0%
COMPOSITION:	100% cotton with vinyl coating
FIRE CLASSIFICATION:	NFPA 701 (small scale), CCC-C-521E

	SOLAR OPTICAL PROPERTIES				SHADING COEFFICIENT		
					SINGLE		
COLOR	**TS**	**RS**	**AS**	**TV**	**1/8CL**	**1/4CL**	**1/4HA**
ALL COLORS	*	*	*	*	*	*	*

***** *Test results not yet available.*

TS Solar Transmittance
RS Solar Reflectance
AS Solar Absorptance
TV Visual Transmittance

1/8 CL 1/8" Clear Glass
1/4 CL 1/4" Clear Glass
1/4 HA 1/4" Heat Absorbing Glass

- The solar optical properties are used to calculate the shading coefficient.
- The shading coefficient represents the percentage of solar heat gain that is transmitted to the interior through the glass and shading system. Darker colors provide maximum glare reduction and visibility.

SheerWeave 7000 | 0% openness

WHITE

BIRCH

SAND

WHEAT

MUSHROOM

CANYON

GRAPHITE

ONYX

Specifications

MAX. FABRIC WIDTH:	94"
ROLL LENGTH:	30 yd
FABRIC WEIGHT:	10.0 oz/yd^2
FABRIC THICKNESS:	0.018"
OPENNESS FACTOR:	0%
COMPOSITION:	100% polyester with acrylic foamed cream-colored backing

UV BLOCKAGE:	90% – 95%
FIRE CLASSIFICATION:	NFPA 701-99 TM#1 (small scale), California Title 19 (small scale), British Standard
BREAKING STRENGTH:	warp 205 lbs fill 225 lbs

	SOLAR OPTICAL PROPERTIES				SHADING COEFFICIENT WITH					
					SINGLE			INSULATING		
COLOR	**TS**	**RS**	**AS**	**TV**	**1/8 CL**	**1/4 CL**	**1/4 HA**	**1/2 CL**	**1CL**	**1HA**
WHITE	0	64	36	0	0.31	0.31	0.3	*	0.3	0.24
ONYX	0	64	36	0	0.31	0.31	0.3	*	0.3	0.24
ALL OTHER COLORS	*	*	*	*	*	*	*	*	*	*

** Test results not yet available.*

TS Solar Transmittance
RS Solar Reflectance
AS Solar Absorptance
TV Visual Transmittance

1/8 CL 1/8" Clear Glass
1/4 CL 1/4" Clear Glass
1/4 HA 1/4" Heat Absorbing Glass

- The solar optical properties are used to calculate the shading coefficient.
- The shading coefficient represents the percentage of solar heat gain that is transmitted to the interior through the glass and shading system. Darker colors provide maximum glare reduction and visibility.

SheerWeave 7100 | 0% openness

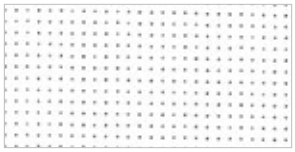
WHITE

WHITE / BONE

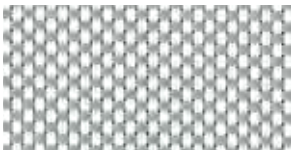
WHITE / PLATINUM

BONE

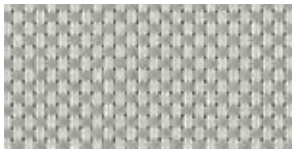
BONE / PLATINUM

CHARCOAL

Specifications

MAX. FABRIC WIDTH:	72"
ROLL LENGTH:	30 yd
FABRIC WEIGHT:	19.8 oz/yd^2
FABRIC THICKNESS:	0.023"
OPENNESS FACTOR:	0%
COMPOSITION:	PVC coated fiberglass laminated with 2-ply 100% PVC blackout film white backing
FIRE CLASSIFICATION:	NFPA 701-99 TM#1, California Title 19
BREAKING STRENGTH:	warp 253 lbs fill 263 lbs

	SOLAR OPTICAL PROPERTIES				SHADING COEFFICIENT WITH					
					SINGLE			INSULATING		
COLOR	**TS**	**RS**	**AS**	**TV**	**1/8 CL**	**1/4 CL**	**1/4 HA**	**1/2 CL**	**1CL**	**1HA**
WHITE	0	71	29	0	0.25	0.26	0.28	*	0.26	0.22
CHARCOAL	0	69	31	0	0.27	0.28	0.29	*	0.28	0.23
ALL OTHER COLORS	*	*	*	*	*	*	*	*	*	*

** Test results not yet available.*

TS Solar Transmittance
RS Solar Reflectance
AS Solar Absorptance
TV Visual Transmittance

1/8 CL 1/8" Clear Glass
1/4 CL 1/4" Clear Glass
1/4 HA 1/4" Heat Absorbing Glass

- The solar optical properties are used to calculate the shading coefficient.
- The shading coefficient represents the percentage of solar heat gain that is transmitted to the interior through the glass and shading system. Darker colors provide maximum glare reduction and visibility.

E Screen 7501 | 1% openness

Fabric is also available in: 3% openness (see E Screen 7503, page 90)
5% openness (see E Screen 7505, page 101)
10% openness (see E Screen 7510, page 113)

WHITE / WHITE

WHITE / LINEN

LINEN / LINEN

WHITE / PEARL

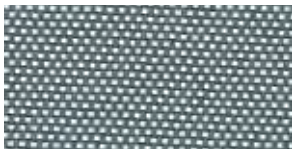
GRAY / WHITE

GRAY / GRAY

CHARCOAL / GRAY

CHARCOAL / BRONZE

CHARCOAL / CHARCOAL

Specifications

MAX. FABRIC WIDTH:	98.4"
ROLL LENGTH:	30 yd
FABRIC WEIGHT:	13.3 oz/yd^2
FABRIC THICKNESS:	0.020"
OPENNESS FACTOR:	1%
COMPOSITION:	64% vinyl, 36% fiberglass

UV BLOCKAGE:	99%
FIRE CLASSIFICATION:	NFPA 701-04 TM#1, California Title 19
BREAKING STRENGTH:	warp > 280 lbs weft > 250 lbs
YARN DIAMETER:	warp 26 ends/in weft 19.5 ends/in

	SOLAR OPTICAL PROPERTIES				SHADING COEFFICIENT WITH					
					SINGLE			INSULATING		
COLOR	TS	RS	AS	TV	1/8 CL	1/4 CL	1/4 HA	1/2 CL	1CL	1HA
WHITE/WHITE	17	68	15	15	*	0.32	0.31	*	*	*
WHITE/LINEN	18	60	22	13	*	0.38	0.34	*	*	*
LINEN/LINEN	17	52	31	11	*	0.43	0.37	*	*	*
WHITE/PEARL	10	52	38	8	*	0.41	0.36	*	*	*
GRAY/WHITE	6	33	61	3	*	0.52	0.42	*	*	*
GRAY/GRAY	4	19	77	2	*	0.60	0.46	*	*	*
CHARCOAL/GRAY	1	9	90	1	*	0.66	0.49	*	*	*
CHARCOAL/BRONZE	1	6	93	1	*	0.68	0.50	*	*	*
CHARCOAL/CHARCOAL	1	5	94	1	*	0.68	0.50	*	*	*

** Test results not yet available.*

TS Solar Transmittance
RS Solar Reflectance
AS Solar Absorptance
TV Visual Transmittance

1/8 CL 1/8" Clear Glass
1/4 CL 1/4" Clear Glass
1/4 HA 1/4" Heat Absorbing Glass

- The solar optical properties are used to calculate the shading coefficient.
- The shading coefficient represents the percentage of solar heat gain that is transmitted to the interior through the glass and shading system. Darker colors provide maximum glare reduction and visibility.

GlacierScreen HD2001 | 1% openness

Fabric is also available in:
3% openness (see GlacierScreen HD2003, page 92)

WHITE / WHITE

WHITE / LINEN

WHITE / SAND

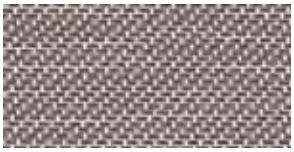

WHITE / BRONZE

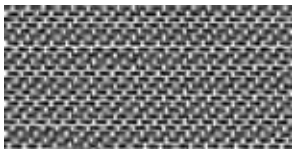

WHITE / BLACK

Specifications

MAX. FABRIC WIDTH:	118"
ROLL LENGTH:	32.8 yd
FABRIC WEIGHT:	14.9 oz/yd^2
FABRIC THICKNESS:	0.0268"
OPENNESS FACTOR:	1%

COMPOSITION:	78% vinyl, 22% polyester
FIRE CLASSIFICATION:	NFPA 701-99 (small scale), Silver nano sterilization verified for anti-microbial performance

		SOLAR OPTICAL PROPERTIES						SHADING COEFFICIENT WITH INSULATING		
COLOR		**Ts**	**Rs**	**As**	**Tuv**	**Tv**	**O-F**	**1/8CL**	**1/4CL**	**1/4HA**
WHITE / WHITE		20	64	16	1	13	< 0.5%	0.36	0.36	0.33
WHITE / LINEN	LIGHT SIDE	18	62	20	1	12	1	0.37	0.37	0.34
	DARK SIDE	18	59	23	1	12	1	0.39	0.38	0.35
WHITE / SAND	LIGHT SIDE	14	59	27	1	8	< 0.5%	0.38	0.38	0.34
	DARK SIDE	14	47	39	1	8	< 0.5%	0.46	0.45	0.38
WHITE / BRONZE	LIGHT SIDE	7	52	41	1	5	< 0.5%	0.41	0.40	0.35
	DARK SIDE	7	29	64	1	5	< 0.5%	0.57	0.55	0.43
WHITE / BLACK	LIGHT SIDE	6	50	44	1	5	< 0.5%	0.42	0.41	0.36
	DARK SIDE	6	24	70	1	5	< 0.5%	0.60	0.58	0.45

TS Solar Transmittance
RS Solar Reflectance
AS Solar Absorptance
Tuv Ultraviolet Transmittance
TV Visual Transmittance
O-F Openness Factor

1/8 CL 1/8" Clear Glass
1/4 CL 1/4" Clear Glass
1/4 HA 1/4" Heat Absorbing Glass

- The solar optical properties are used to calculate the shading coefficient.
- The shading coefficient represents the percentage of solar heat gain that is transmitted to the interior through the glass and shading system. Darker colors provide maximum glare reduction and visibility.

SheerWeave 2500 | 1% openness

OYSTER

OYSTER/BEIGE

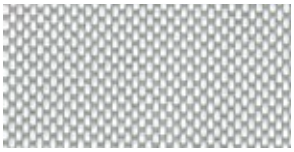
OYSTER/PEARL GRAY

BEIGE

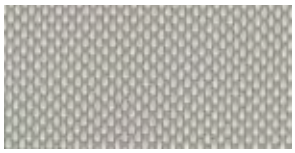
BEIGE/PEARL GRAY

PEARL GRAY

CHARCOAL/GRAY

CHARCOAL/CHESTNUT

CHARCOAL

Specifications

MAX. FABRIC WIDTH:	98"
ROLL LENGTH:	30 yd
FABRIC WEIGHT:	16.1 oz/yd^2
FABRIC THICKNESS:	0.024"
OPENNESS FACTOR:	1%
COMPOSITION:	65% PVC, 35% fiberglass

UV BLOCKAGE:	99%
FIRE CLASSIFICATION:	M1, California U.S. Title 19 (small Scale), NFPA 701-2004 TM#1, TM#2
BREAKING STRENGTH:	warp 250 lbs, fill 235 lbs
STIFFNESS:	warp 190 Mg, fill 220 Mg
YARN DIAMETER:	warp 0.011", fill 0.013"

	SOLAR OPTICAL PROPERTIES				SHADING COEFFICIENT SINGLE		
COLOR	**TS**	**RS**	**AS**	**TV**	**1/8CL**	**1/4CL**	**1/4HA**
OYSTER	15	68	17	19	0.31	0.32	0.31
OYSTER/BEIGE	10	60	30	9	0.36	0.36	0.33
OYSTER/PEARL GRAY	7	50	43	9	0.43	0.42	0.36
BEIGE	7	50	43	6	0.43	0.42	0.36
BEIGE/PEARL GRAY	5	42	53	5	0.48	0.46	0.39
PEARL GRAY	3	32	45	3	0.54	0.52	0.42
CHARCOAL	1	4	96	1	0.73	0.69	0.50
CHARCOAL/GRAY	2	8	90	3	0.70	0.67	0.49
CHARCOAL/CHESTNUT	1	6	93	1	0.71	0.68	0.50

** Test results not yet available.*

TS Solar Transmittance
RS Solar Reflectance
AS Solar Absorptance
TV Visual Transmittance

1/8 CL 1/8" Clear Glass
1/4 CL 1/4" Clear Glass
1/4 HA 1/4" Heat Absorbing Glass

- The solar optical properties are used to calculate the shading coefficient.
- The shading coefficient represents the percentage of solar heat gain that is transmitted to the interior through the glass and shading system. Darker colors provide maximum glare reduction and visibility.

SheerWeave 2701 | 1% openness

Fabric is also available in: 3% openness (see SheerWeave 2703, page 96)
5% openness (see SheerWeave 2705, page 108)
10% openness (see SheerWeave 2710, page 118)

OYSTER

OYSTER/BEIGE

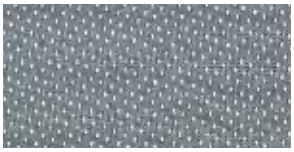
OYSTER/PEWTER

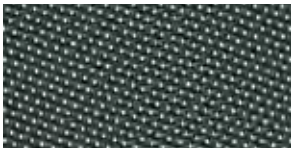
OYSTER/CHARCOAL

OYSTER/CHESTNUT

Specifications

MAX. FABRIC WIDTH:	98.4"
ROLL LENGTH:	30 yd
FABRIC WEIGHT:	14.6 oz/yd^2
FABRIC THICKNESS:	0.027"
OPENNESS FACTOR:	1%

COMPOSITION:	64% PVC, 36% fiberglass
UV BLOCKAGE:	99%
FIRE CLASSIFICATION:	NFPA 701-04 TM#1, TM#2 California U.S. Title 19
BREAKING STRENGTH:	warp 262 lbs fill 377 lbs

	SOLAR OPTICAL PROPERTIES				SHADING COEFFICIENT		
					SINGLE		
COLOR	**TS**	**RS**	**AS**	**TV**	**1/8CL**	**1/4CL**	**1/4HA**
OYSTER	21	64	15	17	0.36	0.36	0.33
OYSTER/BEIGE	15	57	28	12	0.38	0.38	0.34
OYSTER/CHARCOAL	5	39	56	6	0.49	0.47	0.39
OYSTER/PEWTER	6	43	51	6	0.46	0.45	0.37
OYSTER/CHESTNUT	6	41	53	6	0.47	0.46	0.38

***** *Test results not yet available.*

TS Solar Transmittance
RS Solar Reflectance
AS Solar Absorptance
TV Visual Transmittance

1/8 CL 1/8" Clear Glass
1/4 CL 1/4" Clear Glass
1/4 HA 1/4" Heat Absorbing Glass

- The solar optical properties are used to calculate the shading coefficient.
- The shading coefficient represents the percentage of solar heat gain that is transmitted to the interior through the glass and shading system. Darker colors provide maximum glare reduction and visibility.

SheerWeave 4800 | 1% openness

CHALK

ALABASTER

PEARL

SAND

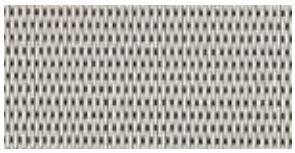
TAUPE

GRAY

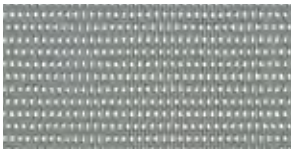
CLAY

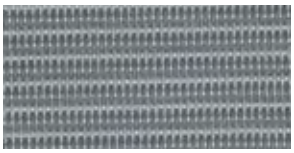
FLEECE

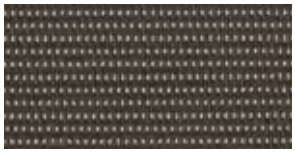
MOCHA

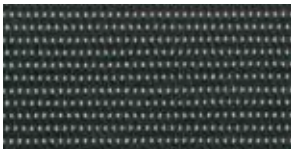
MINK

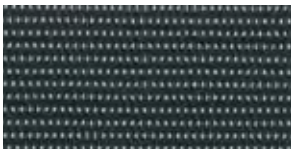
FLINT

EBONY

Specifications

MAX. FABRIC WIDTH:	96"
ROLL LENGTH:	30 yd
FABRIC WEIGHT:	18.5 oz/yd^2
FABRIC THICKNESS:	0.036"
OPENNESS FACTOR:	1%
COMPOSITION:	76% PVC on polyester, 24% polyester
UV BLOCKAGE:	99%

FIRE CLASSIFICATION:	NFPA 701 (small scale)
BREAKING STRENGTH:	warp 400 lbs fill 120 lbs
STIFFNESS:	warp 800 Mg fill 300 Mg
STRETCH:	warp 1.0%, fill 3.0%
YARN DIAMETER:	0.020"

	SOLAR OPTICAL PROPERTIES					SHADING COEFFICIENT WITH					
						SINGLE			INSULATING		
COLOR	TS	RS	AS	TuV	TV	1/8CL	1/4CL	1/4HA	1/2 CL	1CL	1HA
CHALK	8	77	15	6	< 0.5%	0.21	0.22	0.26	0.22	0.24	0.21
ALABASTER	10	62	28	4	*	0.35	0.35	0.32	0.33	0.33	0.26
PEARL	4	67	29	3	< 0.5%	0.29	0.30	0.3	0.28	0.29	0.24
SAND	1	51	48	1	< 0.5%	0.40	0.40	0.35	0.39	0.38	0.29
TAUPE	1	41	58	< 0.5%	0	0.47	0.46	0.38	0.45	0.43	0.32
GRAY	4	51	45	2	*	0.41	0.40	0.35	0.39	0.38	0.29
CLAY	< 0.5%	32	68	< 0.5%	< 0.5%	0.53	0.51	0.41	0.51	0.48	0.34
FLEECE	< 0.5%	24	76	1	< 0.5%	0.59	0.56	0.44	0.56	0.52	0.37
MOCHA	< 0.5%	12	88	1	< 0.5%	0.67	0.64	0.48	0.63	0.58	0.40
MINK	< 0.5%	7	93	< 0.5%	< 0.5%	0.70	0.67	0.49	0.66	0.61	0.42
FLINT	0	8	92	< 0.5%	0	0.70	0.66	0.49	0.65	0.60	0.41
EBONY	0	3	97	< 0.5%	< 0.5%	0.73	0.69	0.51	0.68	0.63	0.43

** Test results not yet available.*

TS Solar Transmittance
RS Solar Reflectance
AS Solar Absorptance
Tuv Ultraviolet Transmittance
TV Visual Transmittance

1/8 CL 1/8" Clear Glass
1/4 CL 1/4" Clear Glass
1/4 HA 1/4" Heat Absorbing Glass

- The solar optical properties are used to calculate the shading coefficient.
- The shading coefficient represents the percentage of solar heat gain that is transmitted to the interior through the glass and shading system. Darker colors provide maximum glare reduction and visibility.

E Screen 7503 | 3% openness

Fabric is also available in: 1% openness (see E Screen 7501, page 85)
5% openness (see E Screen 7505, page 101)
10% openness (see E Screen 7510, page 113)

WHITE / WHITE

WHITE / LINEN

LINEN / LINEN

WHITE / PEARL

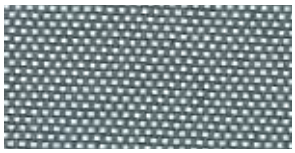
GRAY / WHITE

GRAY / GRAY

CHARCOAL / GRAY

CHARCOAL / BRONZE

CHARCOAL / CHARCOAL

Specifications

MAX. FABRIC WIDTH:	98.4"
ROLL LENGTH:	30 yd
FABRIC WEIGHT:	12.3 oz/yd^2
FABRIC THICKNESS:	0.020"
OPENNESS FACTOR:	3%
COMPOSITION:	64% vinyl, 36% fiberglass
UV BLOCKAGE:	97-98%
FIRE CLASSIFICATION:	NFPA 701-04 TM#1, California Title 19
BREAKING STRENGTH:	warp > 280 lbs weft > 250 lbs
YARN DIAMETER:	warp 26 ends/in weft 16 ends/in

	SOLAR OPTICAL PROPERTIES				SHADING COEFFICIENT WITH					
					SINGLE			INSULATING		
COLOR	TS	RS	AS	TV	1/8CL	1/4CL	1/4HA	1/2 CL	1CL	1HA
WHITE/WHITE	20	65	15	17	*	0.35	0.33	*	*	*
WHITE/LINEN	19	60	21	16	*	0.38	0.34	*	*	*
LINEN/LINEN	20	51	29	15	*	0.44	0.38	*	*	*
WHITE/PEARL	13	51	36	11	*	0.42	0.37	*	*	*
GRAY/WHITE	9	30	61	6	*	0.55	0.43	*	*	*
GRAY/GRAY	6	18	76	5	*	0.61	0.47	*	*	*
CHARCOAL/GRAY	3	9	88	3	*	0.66	0.49	*	*	*
CHARCOAL/BRONZE	2	6	92	3	*	0.68	0.50	*	*	*
CHARCOAL/CHARCOAL	2	5	93	3	*	0.68	0.50	*	*	*

** Test results not yet available.*

TS Solar Transmittance
RS Solar Reflectance
AS Solar Absorptance
TV Visual Transmittance

1/8 CL 1/8" Clear Glass
1/4 CL 1/4" Clear Glass
1/4 HA 1/4" Heat Absorbing Glass

- The solar optical properties are used to calculate the shading coefficient.
- The shading coefficient represents the percentage of solar heat gain that is transmitted to the interior through the glass and shading system. Darker colors provide maximum glare reduction and visibility.

GlacierScreen HD1003 | 3% openness

Fabric is also available in:
5% openness (see GlacierScreen HD1005, page 102)
10% openness (see GlacierScreen HD1010, page 114)

WHITE / WHITE

WHITE / LINEN

WHITE / SAND

WHITE / PEARL

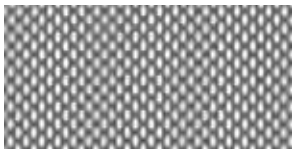
WHITE / GRAY

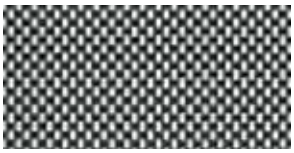
WHITE / BLACK

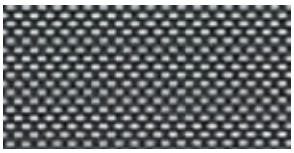
BLACK / PEARL

BLACK / BRONZE

BLACK / BLACK

Specifications

MAX. FABRIC WIDTH:	118"	OPENNESS FACTOR:	3%
ROLL LENGTH:	32.8 yd	COMPOSITION:	78% vinyl, 22% polyester
FABRIC WEIGHT:	14.6 oz/yd^2	FIRE CLASSIFICATION:	NFPA 701-2004 TM#1 Cal Tech Title 19
FABRIC THICKNESS:	0.0283"		

	SOLAR OPTICAL PROPERTIES					SHADING COEFFICIENT WITH INSULATING		
COLOR	**Ts**	**Rs**	**As**	**Tuv**	**Tv**	**1/8CL**	**1/4CL**	**1/4HA**
WHITE/WHITE	21	67	12	4	18	0.34	0.34	0.32
WHITE/SAND	13	50	37	4	11	0.44	0.43	0.37
WHITE/LINEN	20	63	17	4	16	0.36	0.36	0.33
WHITE/PEARL	15	54	31	4	13	0.42	0.41	0.36
WHITE/GRAY	8	38	54	4	9	0.51	0.50	0.40
WHITE/BLACK	6	29	65	4	7	0.57	0.55	0.43
BLACK/PEARL	4	18	78	4	6	0.64	0.61	0.46
BLACK/BLACK	4	4	92	4	6	0.73	0.69	0.51
BLACK/BRONZE	4	6	90	4	5	0.72	0.68	0.50

TS Solar Transmittance
RS Solar Reflectance
AS Solar Absorptance
Tuv Ultraviolet Transmittance
TV Visual Transmittance

1/8 CL 1/8" Clear Glass
1/4 CL 1/4" Clear Glass
1/4 HA 1/4" Heat Absorbing Glass

- The solar optical properties are used to calculate the shading coefficient.
- The shading coefficient represents the percentage of solar heat gain that is transmitted to the interior through the glass and shading system. Darker colors provide maximum glare reduction and visibility.

GlacierScreen HD2003 | 3% openness

Fabric is also available in:
1% openness (see GlacierScreen HD2001, page 86)

WHITE / WHITE

WHITE / LINEN

WHITE / SAND

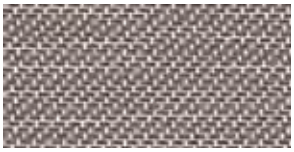

WHITE / BRONZE

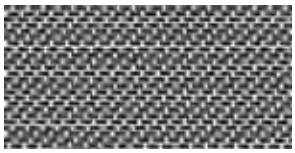

WHITE / BLACK

Specifications

MAX. FABRIC WIDTH:	118"
ROLL LENGTH:	32.8 yd
FABRIC WEIGHT:	13.3 oz/yd
FABRIC THICKNESS:	0.028"

OPENNESS FACTOR:	3%
COMPOSITION:	78% vinyl, 22% polyester
FIRE CLASSIFICATION:	NFPA 701-2004 TM#1

		SOLAR OPTICAL PROPERTIES					SHADING COEFFICIENT WITH INSULATING		
COLOR		**Ts**	**Rs**	**As**	**Tuv**	**Tv**	**1/8CL**	**1/4CL**	**1/4HA**
WHITE / WHITE		24	64	12	4	20	0.37	0.37	0.34
WHITE / LINEN	LIGHT SIDE	23	63	14	4	19	0.37	0.37	0.34
	DARK SIDE	23	61	16	4	19	0.39	0.38	0.35
WHITE / SAND	LIGHT SIDE	17	58	25	4	14	0.39	0.39	0.35
	DARK SIDE	17	48	35	4	14	0.46	0.45	0.38
WHITE / BRONZE	LIGHT SIDE	11	50	39	4	11	0.43	0.43	0.37
	DARK SIDE	11	28	61	4	11	0.59	0.56	0.44
WHITE / BLACK	LIGHT SIDE	9	48	43	3	9	0.44	0.43	0.37
	DARK SIDE	9	23	68	3	9	0.62	0.59	0.45

TS Solar Transmittance
RS Solar Reflectance
AS Solar Absorptance
Tuv Ultraviolet Transmittance
TV Visual Transmittance

1/8 CL 1/8" Clear Glass
1/4 CL 1/4" Clear Glass
1/4 HA 1/4" Heat Absorbing Glass

- The solar optical properties are used to calculate the shading coefficient.
- The shading coefficient represents the percentage of solar heat gain that is transmitted to the interior through the glass and shading system. Darker colors provide maximum glare reduction and visibility.

M Screen 8503 | 3% openness

Fabric is also available in 5% openness (see M Screen 8505, page 103)

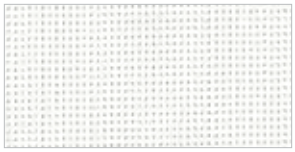
WHITE/WHITE

WHITE/LOTUS

WHITE/STONE

WHITE/LINEN

LINEN/LINEN

WHITE/SABLE

LINEN/STONE

PEARL/APRICOT

WHITE/PEARL

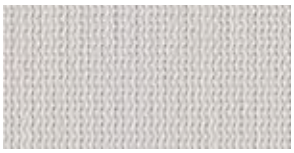
PEARL/LOTUS

PEARL/LINEN

PEARL/SABLE

PEARL/PEARL

LINEN/ULTRAMARINE

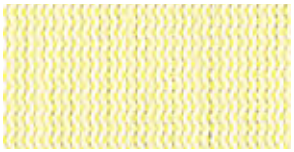
WHITE/CANARY

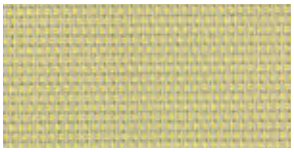
PEARL/CANARY

CHARCOAL/APRICOT

CHARCOAL/SABLE

GRAY/LOTUS

CHARCOAL/LOTUS

GRAY/HUNTER

CHARCOAL/SKY

GRAY/ULTRAMARINE

CHARCOAL/GRAY

CHARCOAL/MANDARIN

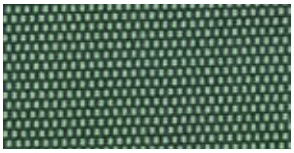
CHARCOAL/PARROT

CHARCOAL/HUNTER

CHARCOAL/ULTRAMARINE

CHARCOAL/BRONZE

CHARCOAL/CHARCOAL

See next page for M Screen 8503 fabric specifications.

M Screen 8503 | Specifications

MAX. FABRIC WIDTH:	98.4"
ROLL LENGTH:	30 yd
FABRIC WEIGHT:	12.7 oz/yd²
FABRIC THICKNESS:	0.022"
OPENNESS FACTOR:	3%
COMPOSITION:	64% vinyl, 36% fiberglass
UV BLOCKAGE:	97%
FIRE CLASSIFICATION:	NFPA 701 (small scale), California Title 19
BREAKING STRENGTH:	warp > 290 lbs weft > 280 lbs
YARN DIAMETER:	0.012"

	SOLAR OPTICAL PROPERTIES				SHADING COEFFICIENT SINGLE		
COLOR	**TS**	**RS**	**AS**	**TV**	**1/8CL**	**1/4CL**	**1/4HA**
WHITE/WHITE	17	63	20	12	0.36	0.36	0.33
WHITE/LOTUS	19	57	24	12	0.41	0.40	0.35
WHITE/STONE	*	*	*	*	*	*	*
WHITE/LINEN	14	59	27	9	0.38	0.38	0.34
LINEN/LINEN	11	55	34	7	0.40	0.39	0.35
WHITE/SABLE	19	48	33	11	0.47	0.46	0.38
LINEN/STONE	*	*	*	*	*	*	*
PEARL/APRICOT	20	39	41	11	0.54	0.52	0.42
WHITE/PEARL	14	49	37	10	0.45	0.44	0.37
PEARL/LOTUS	14	39	47	9	0.52	0.50	0.41
PEARL/LINEN	10	43	47	7	0.48	0.47	0.39
PEARL/SABLE	15	34	51	10	0.56	0.54	0.43
PEARL/PEARL	11	34	55	7	0.55	0.53	0.42
LINEN/ULTRAMARINE	6	33	61	5	0.54	0.52	0.42
WHITE/CANARY	*	*	*	*	*	*	*
PEARL/CANARY	*	*	*	*	*	*	*
CHARCOAL/APRICOT	5	14	81	4	0.67	0.64	0.48
CHARCOAL/SABLE	4	12	84	4	0.68	0.65	0.48
GRAY/LOTUS	9	27	64	6	0.59	0.57	0.44
CHARCOAL/LOTUS	5	15	80	5	0.66	0.63	0.47
GRAY/HUNTER	*	*	*	*	*	*	*
CHARCOAL/SKY	*	*	*	*	*	*	*
GRAY/ULTRAMARINE	5	15	80	4	0.66	0.63	0.47
CHARCOAL/GRAY	4	9	87	5	0.70	0.66	0.49
CHARCOAL/MANDARIN	6	13	81	4	0.68	0.65	0.48
CHARCOAL/PARROT	*	*	*	*	*	*	*
CHARCOAL/HUNTER	4	6	90	4	0.72	0.68	0.5
CHARCOAL/ULTRAMARINE	3	6	91	4	0.72	0.68	0.50
CHARCOAL/BRONZE	3	6	91	4	0.72	0.68	0.50
CHARCOAL/CHARCOAL	3	4	93	4	0.73	0.69	0.51

** Test results not yet available.*

TS Solar Transmittance
RS Solar Reflectance
AS Solar Absorptance
TV Visual Transmittance

1/8 CL 1/8" Clear Glass
1/4 CL 1/4" Clear Glass
1/4 HA 1/4" Heat Absorbing Glass

- The solar optical properties are used to calculate the shading coefficient.
- The shading coefficient represents the percentage of solar heat gain that is transmitted to the interior through the glass and shading system. Darker colors provide maximum glare reduction and visibility.

See previous page for M Screen 8503 fabric colors.

SheerWeave 2410 | 3% openness

Fabric is also available in: 5% openness (see SheerWeave 2390, page 107)
10% openness (see SheerWeave 2360, page 117)

OYSTER

OYSTER/BEIGE

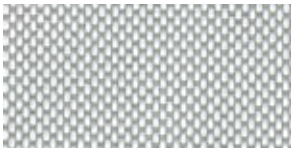
OYSTER/PEARL GRAY

BEIGE

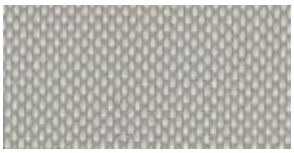
BEIGE/PEARL GRAY

PEARL GRAY

CHARCOAL/GRAY

CHARCOAL/CHESTNUT

CHARCOAL

Specifications

MAX. FABRIC WIDTH:	98"
ROLL LENGTH:	30 yd
FABRIC WEIGHT:	13.9 oz/yd^2
FABRIC THICKNESS:	0.019"
OPENNESS FACTOR:	3%
COMPOSITION:	65% PVC on fiberglass, 35% fiberglass
UV BLOCKAGE:	97%

FIRE CLASSIFICATION:	NFPA 701 (small scale), ASTM-G21 and ASTM-G22 (bacterial and fungal resistance)
BREAKING STRENGTH:	warp 255 lbs fill 325 lbs
STIFFNESS:	warp 212 Mg fill 233 Mg
YARN DIAMETER:	warp 0.011" fill 0.013"

	SOLAR OPTICAL PROPERTIES				SHADING COEFFICIENT WITH					
					SINGLE			INSULATING		
COLOR	TS	RS	AS	TV	1/8 CL	1/4 CL	1/4 HA	1/2 CL	1CL	1HA
OYSTER	17	64	19	12	0.35	0.35	0.33	0.33	0.33	0.26
OYSTER/BEIGE	11	55	34	8	0.40	0.39	0.35	0.38	0.37	0.28
OYSTER/PEARL GRAY	9	44	47	7	0.47	0.46	0.38	0.44	0.43	0.31
BEIGE	10	48	42	7	0.45	0.44	0.37	0.42	0.41	0.30
BEIGE/PEARL GRAY	7	39	54	5	0.50	0.49	0.40	0.47	0.45	0.33
PEARL GRAY	6	31	63	5	0.56	0.53	0.42	0.52	0.49	0.35
CHARCOAL/GRAY	3	9	88	3	0.70	0.66	0.49	0.65	0.60	0.41
CHARCOAL/CHESTNUT	3	6	91	3	0.72	0.68	0.50	0.67	0.62	0.42
CHARCOAL	3	3	94	3	0.74	0.70	0.51	0.69	0.63	0.43

** Test results not yet available.*

TS Solar Transmittance
RS Solar Reflectance
AS Solar Absorptance
TV Visual Transmittance

1/8 CL 1/8" Clear Glass
1/4 CL 1/4" Clear Glass
1/4 HA 1/4" Heat Absorbing Glass

- The solar optical properties are used to calculate the shading coefficient.
- The shading coefficient represents the percentage of solar heat gain that is transmitted to the interior through the glass and shading system. Darker colors provide maximum glare reduction and visibility.

SheerWeave 2703 | 3% openness

Fabric is also available in: 1% openness (see SheerWeave 2701, page 88)
5% openness (see SheerWeave 2705, page 108)
10% openness (see SheerWeave 2710, page 118)

OYSTER

OYSTER/BEIGE

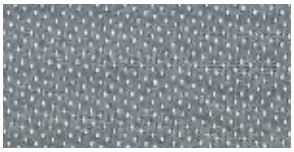
OYSTER/PEWTER

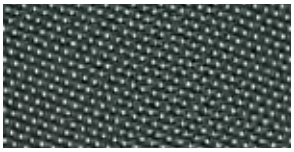
OYSTER/CHARCOAL

OYSTER/CHESTNUT

Specifications

MAX. FABRIC WIDTH:	98.4"
ROLL LENGTH:	30 yd
FABRIC WEIGHT:	14.0 oz/yd^2
FABRIC THICKNESS:	0.028"
OPENNESS FACTOR:	3%

COMPOSITION:	64% PVC, 36% fiberglass
UV BLOCKAGE:	97%
FIRE CLASSIFICATION:	NFPA 701-04 TM#1, TM#2 California U.S. Title 19
BREAKING STRENGTH:	warp 247 lbs fill 312 lbs

	SOLAR OPTICAL PROPERTIES				SHADING COEFFICIENT		
					SINGLE		
COLOR	**TS**	**RS**	**AS**	**TV**	**1/8CL**	**1/4CL**	**1/4HA**
OYSTER	22	62	16	19	0.38	0.37	0.34
OYSTER/BEIGE	15	58	27	13	0.38	0.38	0.34
OYSTER/CHARCOAL	7	40	53	8	0.50	0.48	0.39
OYSTER/PEWTER	8	44	48	9	0.47	0.46	0.38
OYSTER/CHESTNUT	7	42	51	8	0.48	0.47	0.39

** Test results not yet available.*

TS Solar Transmittance
RS Solar Reflectance
AS Solar Absorptance
TV Visual Transmittance

1/8 CL 1/8" Clear Glass
1/4 CL 1/4" Clear Glass
1/4 HA 1/4" Heat Absorbing Glass

- The solar optical properties are used to calculate the shading coefficient.
- The shading coefficient represents the percentage of solar heat gain that is transmitted to the interior through the glass and shading system. Darker colors provide maximum glare reduction and visibility.

SheerWeave 4400 | 3% openness

Fabric is also available in: 5% openness (see SheerWeave 4000, page 109)
10% openness (see SheerWeave 4100, page 119)

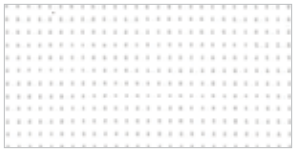
CHALK

ALABASTER

PEBBLESTONE

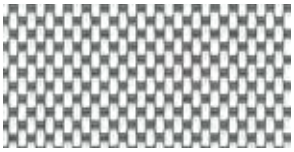
GRANITE

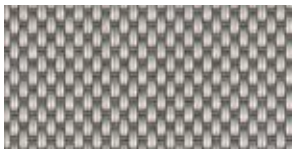
GRAYSTONE

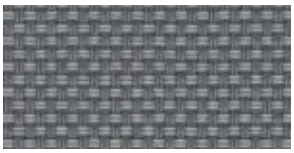
PEWTER

ASH

TOBACCO

EBONY

Specifications

MAX. FABRIC WIDTH:	98"
ROLL LENGTH:	30 yd
FABRIC WEIGHT:	20.7 oz/yd^2
FABRIC THICKNESS:	0.037"
OPENNESS FACTOR:	3%
COMPOSITION:	75% PVC on polyester, 25% polyester
UV BLOCKAGE:	97%

FIRE CLASSIFICATION:	NFPA 701 (small scale)
BREAKING STRENGTH:	warp 340 lbs fill 250 lbs
STIFFNESS:	warp 650 Mg fill 450 Mg
STRETCH:	warp 1.5%, fill 4.0%
YARN DIAMETER:	0.020"

	SOLAR OPTICAL PROPERTIES				SHADING COEFFICIENT WITH					
					SINGLE			INSULATING		
COLOR	**TS**	**RS**	**AS**	**TV**	**1/8CL**	**1/4CL**	**1/4HA**	**1/2 CL**	**1CL**	**1HA**
CHALK	12	70	18	7	*	0.30	0.30	*	0.16	0.15
ALABASTER	10	62	28	6	*	0.35	0.32	*	0.19	0.17
PEBBLESTONE	9	51	40	6	*	0.42	0.36	*	0.38	0.28
GRANITE	6	48	46	5	*	0.43	0.37	*	0.25	0.20
GRAYSTONE	6	39	55	5	*	0.48	0.40	*	0.44	0.32
PEWTER	3	26	71	2	*	0.56	0.44	*	0.34	0.25
ASH	3	10	87	4	*	0.66	0.49	*	0.60	0.41
TOBACCO	3	5	92	3	*	0.69	0.50	*	0.62	0.42
EBONY	3	3	94	3	*	0.70	0.51	*	0.63	0.43

***** *Test results not yet available.*

TS Solar Transmittance
RS Solar Reflectance
AS Solar Absorptance
TV Visual Transmittance

1/8 CL 1/8" Clear Glass
1/4 CL 1/4" Clear Glass
1/4 HA 1/4" Heat Absorbing Glass

- The solar optical properties are used to calculate the shading coefficient.
- The shading coefficient represents the percentage of solar heat gain that is transmitted to the interior through the glass and shading system. Darker colors provide maximum glare reduction and visibility.

SheerWeave 4600 | 3% openness

Fabric is also available in 5% openness (see SheerWeave 4500, page 110)

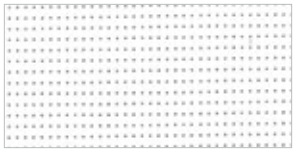
CHALK

ECRU

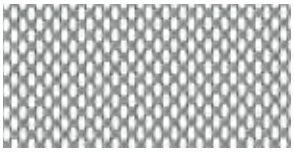
GRANITE

SANDSTONE

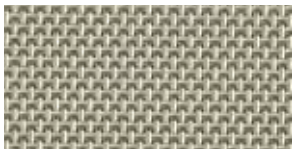
GOLDEN SAND

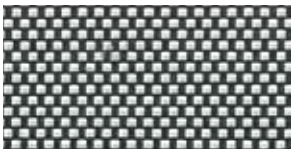
SABLE

EBONY

Specifications

MAX. FABRIC WIDTH:	98"
ROLL LENGTH:	30 yd
FABRIC WEIGHT:	17.4 oz/yd^2
FABRIC THICKNESS:	0.030"
OPENNESS FACTOR:	3%
COMPOSITION:	78% PVC on polyester, 22% polyester
UV BLOCKAGE:	97%

FIRE CLASSIFICATION:	NFPA 701 (small scale)
BREAKING STRENGTH:	warp 183 lbs fill 308 lbs
STIFFNESS:	warp 230 Mg fill 439 Mg
YARN DIAMETER:	0.020"

	SOLAR OPTICAL PROPERTIES				SHADING COEFFICIENT WITH					
					SINGLE			INSULATING		
COLOR	**TS**	**RS**	**AS**	**TV**	**1/8 CL**	**1/4 CL**	**1/4 HA**	**1/2 CL**	**1CL**	**1HA**
CHALK	10	74	16	9	0.26	0.27	0.28	*	0.26	0.22
ECRU	7	58	35	8	0.37	0.37	0.33	*	0.34	0.27
GRANITE	5	43	52	7	0.47	0.46	0.38	*	0.43	0.31
SANDSTONE	5	39	56	6	0.50	0.48	0.40	*	0.45	0.33
GOLDEN SAND	6	37	57	7	0.51	0.50	0.40	*	0.46	0.33
SABLE	5	29	66	6	0.57	0.54	0.43	*	0.50	0.36
EBONY	3	3	94	5	0.74	0.70	0.51	*	0.63	0.43

** Test results not yet available.*

TS Solar Transmittance
RS Solar Reflectance
AS Solar Absorptance
TV Visual Transmittance

1/8 CL 1/8" Clear Glass
1/4 CL 1/4" Clear Glass
1/4 HA 1/4" Heat Absorbing Glass

- The solar optical properties are used to calculate the shading coefficient.
- The shading coefficient represents the percentage of solar heat gain that is transmitted to the interior through the glass and shading system. Darker colors provide maximum glare reduction and visibility.

SheerWeave 4650 | 3% openness

Fabric is also available in 5% openness (see SheerWeave 4550, page 111)

LINEN

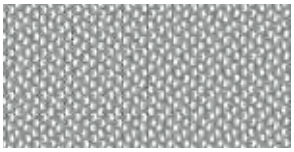

GRANITE

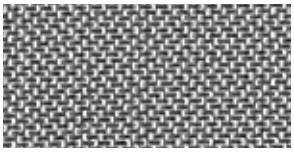

CHESTNUT

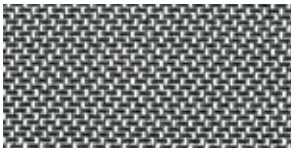

COAL

Specifications

MAX. FABRIC WIDTH:	98"
ROLL LENGTH:	30 yd
FABRIC WEIGHT:	13.3 oz/yd^2
FABRIC THICKNESS:	0.026"
OPENNESS FACTOR:	3%
COMPOSITION:	83% PVC on polyester, 17% polyester
UV BLOCKAGE:	97%

FIRE CLASSIFICATION:	NFPA 701 (small scale)
BREAKING STRENGTH:	warp 180 lbs. fill 135 lbs.
STIFFNESS:	warp 215 Mg fill 175 Mg
YARN DIAMETER:	0.013"

	SOLAR OPTICAL PROPERTIES				SHADING COEFFICIENT WITH					
					SINGLE			INSULATING		
COLOR	**TS**	**RS**	**AS**	**TV**	**1/8 CL**	**1/4 CL**	**1/4 HA**	**1/2 CL**	**1CL**	**1HA**
LINEN	7	58	35	8	0.37	0.37	0.33	*	0.35	0.27
GRANITE	6	55	39	8	0.39	0.38	0.34	*	0.36	0.28
CHESTNUT	7	48	45	8	0.44	0.43	0.37	*	0.40	0.30
COAL	5	47	48	7	0.44	0.43	0.37	*	0.40	0.30

***** *Test results not yet available.*

TS Solar Transmittance
RS Solar Reflectance
AS Solar Absorptance
TV Visual Transmittance

1/8 CL 1/8" Clear Glass
1/4 CL 1/4" Clear Glass
1/4 HA 1/4" Heat Absorbing Glass

- The solar optical properties are used to calculate the shading coefficient.
- The shading coefficient represents the percentage of solar heat gain that is transmitted to the interior through the glass and shading system. Darker colors provide maximum glare reduction and visibility.

Star 2115 | 4% openness

SNOW

IVORY

DESERT

SAHARA

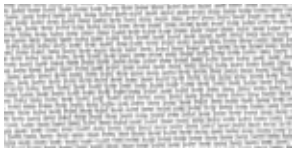
SILVER

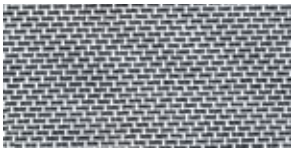
PEWTER

DUSK

GOLD

NIGHT

Specifications

MAX. FABRIC WIDTH:	98"
ROLL LENGTH:	55 yd
FABRIC WEIGHT:	12.38 oz/yd^2
FABRIC THICKNESS:	0.022"
OPENNESS FACTOR:	4%
COMPOSITION:	66% PVC, 34% fiberglass

UV BLOCKAGE:	90%
FIRE CLASSIFICATION:	NFPA 701 (small scale)
BREAKING STRENGTH:	warp 190 lbs weft 110 lbs
STRETCH:	warp 3.6%, fill 3.4%
YARN DIAMETER:	0.001"

	SOLAR OPTICAL PROPERTIES				SHADING COEFFICIENT WITH					
					SINGLE			INSULATING		
COLOR	**TS**	**RS**	**AS**	**TV**	**1/8CL**	**1/4CL**	**1/4HA**	**1/2 CL**	**1CL**	**1HA**
SNOW	19	62	19	13	0.37	0.34	*	*	0.34	0.27
IVORY	20	59	21	13	0.39	0.39	0.35	*	0.36	0.28
DESERT	17 17	60 55	23 28	11 11	0.38 0.41	0.34 0.36	* *	* *	0.38 0.38	0.29 0.29
SAHARA	19 19	56 50	25 31	12 12	0.41 0.46	0.41 0.44	0.36 0.38	* *	0.38 0.41	0.29 0.31
SILVER	13 13	56 45	31 42	9 9	0.39 0.46	0.35 0.39	* *	* *	0.37 0.43	0.28 0.31
PEWTER	11 11	46 26	43 63	9 9	0.46 0.60	0.45 0.58	0.38 0.45	* *	0.42 0.52	0.31 0.37
DUSK	5 5	8 24	87 71	5 5	* *	* *	* *	* *	* *	* *
GOLD	4 4	7 20	89 76	5 5	* *	* *	* *	* *	* *	* *
NIGHT	4 4	4 4	92 92	4 4	* *	* *	* *	* *	* *	* *

** Test results not yet available.*

TS Solar Transmittance
RS Solar Reflectance
AS Solar Absorptance
TV Visual Transmittance

1/8 CL 1/8" Clear Glass
1/4 CL 1/4" Clear Glass
1/4 HA 1/4" Heat Absorbing Glass

- The solar optical properties are used to calculate the shading coefficient.
- The shading coefficient represents the percentage of solar heat gain that is transmitted to the interior through the glass and shading system. Darker colors provide maximum glare reduction and visibility.

E Screen 7505 | 5% openness

Fabric is also available in: 1% openness (see E Screen 7501, page 85)
3% openness (see E Screen 7503, page 90)
10% openness (see E Screen 7510, page 113)

WHITE / WHITE

WHITE/ LINEN

LINEN / STONE

LINEN / LINEN

WHITE / PEARL

PEARL / LINEN

PEARL / PEARL

CHARCOAL / GRAY

CHARCOAL / BRONZE

CHARCOAL / CHARCOAL

Specifications

MAX. FABRIC WIDTH:	96"
ROLL LENGTH:	30 yd
FABRIC WEIGHT:	12.01 oz/yd^2
FABRIC THICKNESS:	0.020"
OPENNESS FACTOR:	5%
COMPOSITION:	64% vinyl, 36% fiberglass

UV BLOCKAGE:	93-94%
FIRE CLASSIFICATION:	NFPA 701 (small scale) TM#1 California Title 19, M1
BREAKING STRENGTH:	warp > 290 lbs weft > 280 lbs
YARN DIAMETER:	0.012"

	SOLAR OPTICAL PROPERTIES				SHADING COEFFICIENT SINGLE	
COLOR	TS	RS	AS	TV	1/4CL	1/4HA
WHITE/WHITE	27	59	14	20	0.41	0.36
WHITE/LINEN	25	54	21	18	0.43	0.37
LINEN/STONE	23	51	24	20	0.45	0.38
LINEN/LINEN	17	53	30	13	0.42	0.36
WHITE/PEARL	21	46	33	17	0.47	0.39
PEARL/LINEN	17	42	41	13	0.49	0.40
PEARL/PEARL	18	33	49	14	0.55	0.43
CHARCOAL/GRAY	8	10	82	8	0.68	0.50
CHARCOAL/BRONZE	8	6	86	9	0.69	0.51
CHARCOAL/CHARCOAL	7	4	89	8	0.70	0.51

***** *Test results not yet available.*

TS Solar Transmittance
RS Solar Reflectance
AS Solar Absorptance
TV Visual Transmittance

1/8 CL 1/8" Clear Glass
1/4 CL 1/4" Clear Glass
1/4 HA 1/4" Heat Absorbing Glass

- The solar optical properties are used to calculate the shading coefficient.
- The shading coefficient represents the percentage of solar heat gain that is transmitted to the interior through the glass and shading system. Darker colors provide maximum glare reduction and visibility.

GlacierScreen HD1005 | 5% openness

Fabric is also available in:
3% openness (see GlacierScreen HD1003, page 91)
10% openness (see GlacierScreen HD1010, page 114)

WHITE / WHITE

WHITE / LINEN

WHITE / SAND

WHITE / PEARL

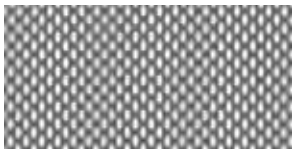
WHITE / GRAY

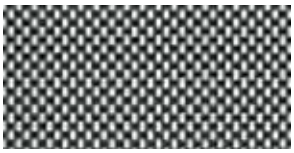
WHITE / BLACK

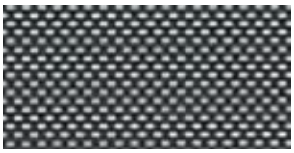
BLACK / PEARL

BLACK / BRONZE

BLACK / BLACK

Specifications

MAX. FABRIC WIDTH:	118"	OPENNESS FACTOR:	5%
ROLL LENGTH:	33 yd.	COMPOSITION:	78% vinyl, 22% polyester
FABRIC WEIGHT:	14.6 oz/yd²	FIRE CLASSIFICATION:	NFPA 701-99 (small scale), Silver nano sterilization verified for anti-microbial performance
FABRIC THICKNESS:	0.0268"		

	SOLAR OPTICAL PROPERTIES						SHADING COEFFICIENT WITH INSULATING		
COLOR	**Ts**	**Rs**	**As**	**Tuv**	**Tv**	**O-F**	**1/8CL**	**1/4CL**	**1/4HA**
WHITE/WHITE	23	63	14	5	18	6	0.37	0.37	0.34
WHITE/LINEN	21	60	19	5	16	5	0.39	0.39	0.35
WHITE/SAND	15	48	37	5	12	6	0.46	0.45	0.38
WHITE/PEARL	17	52	31	5	13	5	0.44	0.43	0.37
WHITE/GRAY	10	36	54	5	10	6	0.53	0.51	0.41
WHITE/BLACK	8	27	65	5	9	5	0.59	0.56	0.44
BLACK/PEARL	7	18	75	5	8	6	0.65	0.62	0.47
BLACK/BRONZE	6	6	88	5	7	5	0.73	0.69	0.50
BLACK/BLACK	6	4	90	5	7	5	0.74	0.70	0.51

TS Solar Transmittance
RS Solar Reflectance
AS Solar Absorptance
Tuv Ultraviolet Transmittance
TV Visual Transmittance
O-F Openness Factor

1/8 CL 1/8" Clear Glass
1/4 CL 1/4" Clear Glass
1/4 HA 1/4" Heat Absorbing Glass

- The solar optical properties are used to calculate the shading coefficient.
- The shading coefficient represents the percentage of solar heat gain that is transmitted to the interior through the glass and shading system. Darker colors provide maximum glare reduction and visibility.

M Screen 8505 | 5% openness

Fabric is also available in 3% openness (see M Screen 8503, page 93)

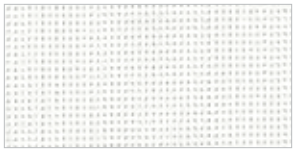
WHITE/WHITE

WHITE/LOTUS

WHITE/STONE

WHITE/LINEN

LINEN/LINEN

WHITE/SABLE

LINEN/STONE

PEARL/APRICOT

WHITE/PEARL

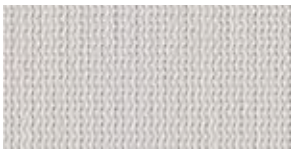
PEARL/LOTUS

PEARL/LINEN

PEARL/SABLE

PEARL/PEARL

LINEN/ULTRAMARINE

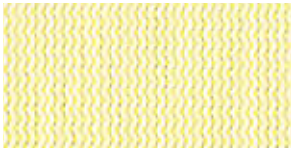
WHITE/CANARY

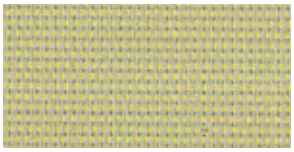
PEARL/CANARY

CHARCOAL/APRICOT

CHARCOAL/SABLE

GRAY/LOTUS

CHARCOAL/LOTUS

GRAY/HUNTER

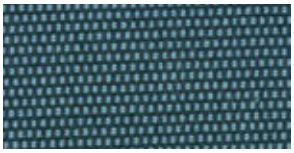
CHARCOAL/SKY

GRAY/ULTRAMARINE

CHARCOAL/GRAY

CHARCOAL/MANDARIN

CHARCOAL/PARROT

CHARCOAL/HUNTER

CHARCOAL/ULTRAMARINE

CHARCOAL/BRONZE

CHARCOAL/CHARCOAL

See next page for M Screen 8505 fabric specifications.

M Screen 8505 | Specifications

MAX. FABRIC WIDTH:	98.4"
ROLL LENGTH:	30 yd
FABRIC WEIGHT:	11.9 oz/yd^2
FABRIC THICKNESS:	0.022"
OPENNESS FACTOR:	5%
COMPOSITION:	64% vinyl, 36% fiberglass
UV BLOCKAGE:	95%
FIRE CLASSIFICATION:	NFPA 701 (small scale), California Title 19
BREAKING STRENGTH:	warp 239 lbs fill 233 lbs
YARN DIAMETER:	0.012"

	SOLAR OPTICAL PROPERTIES				SHADING COEFFICIENT SINGLE		
COLOR	**TS**	**RS**	**AS**	**TV**	**1/8CL**	**1/4CL**	**1/4HA**
WHITE/WHITE	20	63	17	15	0.36	0.36	0.33
WHITE/LOTUS	21	56	23	15	0.42	0.41	0.36
WHITE/STONE	22	56	22	15	0.42	0.41	0.36
WHITE/LINEN	21	56	23	15	0.42	0.41	0.36
LINEN/LINEN	18	51	31	12	0.45	0.44	0.37
WHITE/SABLE	20	48	32	12	0.47	0.46	0.39
LINEN/STONE	23	48	29	15	0.48	0.47	0.39
PEARL/APRICOT	22	38	40	13	0.55	0.53	0.42
WHITE/PEARL	16	49	35	12	0.45	0.44	0.38
PEARL/LOTUS	18	40	42	13	0.52	0.51	0.41
PEARL/LINEN	19	40	41	13	0.53	0.51	0.41
PEARL/SABLE	18	33	49	11	0.57	0.55	0.43
PEARL/PEARL	15	35	50	11	0.55	0.53	0.42
LINEN/ULTRAMARINE	12	27	61	9	0.60	0.57	0.44
WHITE/CANARY	*	*	*	*	*	*	*
PEARL/CANARY	*	*	*	*	*	*	*
CHARCOAL/APRICOT	7	13	80	7	0.68	0.65	0.48
CHARCOAL/SABLE	7	12	81	7	0.69	0.65	0.49
GRAY/LOTUS	12	27	61	9	0.6	0.57	0.44
CHARCOAL/LOTUS	8	16	76	8	0.66	0.63	0.47
GRAY/HUNTER	8	16	76	7	0.66	0.63	0.47
CHARCOAL/SKY	*	*	*	*	*	*	*
GRAY/ULTRAMARINE	8	15	77	7	0.67	0.64	0.48
CHARCOAL/GRAY	6	10	84	7	0.70	0.66	0.49
CHARCOAL/MANDARIN	7	13	80	5	0.68	0.65	0.48
CHARCOAL/PARROT	*	*	*	*	*	*	*
CHARCOAL/HUNTER	6	7	87	7	0.72	0.68	0.50
CHARCOAL/ULTRAMARINE	6	7	87	7	0.72	0.68	0.50
CHARCOAL/BRONZE	6	7	87	7	0.72	0.68	0.50
CHARCOAL/CHARCOAL	6	5	89	7	0.73	0.69	0.51

** Test results not yet available.*

TS Solar Transmittance
RS Solar Reflectance
AS Solar Absorptance
TV Visual Transmittance

1/8 CL 1/8" Clear Glass
1/4 CL 1/4" Clear Glass
1/4 HA 1/4" Heat Absorbing Glass

- The solar optical properties are used to calculate the shading coefficient.
- The shading coefficient represents the percentage of solar heat gain that is transmitted to the interior through the glass and shading system. Darker colors provide maximum glare reduction and visibility.

See previous page for M Screen 8505 fabric colors.

M Screen Deco | 5% openness

FLAGSTONE

RIVER ROCK

HAZELNUT

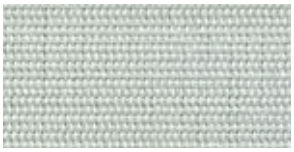
PARCHMENT

TUMBLEWEED

NATURELLE

HARVEST

Specifications

MAX. FABRIC WIDTH:	98.4"
ROLL LENGTH:	30 yd
FABRIC WEIGHT:	11.3 oz/yd^2
FABRIC THICKNESS:	0.020"
OPENNESS FACTOR:	5%

COMPOSITION:	64% vinyl, 36% fiberglass
UV BLOCKAGE:	95-96%
FIRE CLASSIFICATION:	NFPA 701-99 TM#1, California U.S. Title 19, ASTM E-84
BREAKING STRENGTH:	warp > 280 lbs weft > 250 lbs

	SOLAR OPTICAL PROPERTIES				SHADING COEFFICIENT SINGLE	
COLOR	**TS**	**RS**	**AS**	**TV**	**¼CL**	**¼HA**
FLAGSTONE	6	18	76	8	0.61	0.47
RIVER ROCK	7	31	62	7	0.54	0.42
HAZELNUT	6	15	79	7	0.63	0.48
PARCHMENT	12	51	37	10	0.42	0.36
TUMBLEWEED	7	29	64	7	0.55	0.43
NATURELLE	12	50	38	10	0.43	0.37
HARVEST	5	16	79	7	0.62	0.47

TS Solar Transmittance
RS Solar Reflectance
AS Solar Absorptance
TV Visual Transmittance

1/8 CL 1/8" Clear Glass
1/4 CL 1/4" Clear Glass
1/4 HA 1/4" Heat Absorbing Glass

- The solar optical properties are used to calculate the shading coefficient.
- The shading coefficient represents the percentage of solar heat gain that is transmitted to the interior through the glass and shading system. Darker colors provide maximum glare reduction and visibility.

SheerWeave 2000 | 5% openness

Fabric is also available in 10% openness (see SheerWeave 2100, page 116)

WHITE

WHITE / BONE

BONE

BONE / PLATINUM

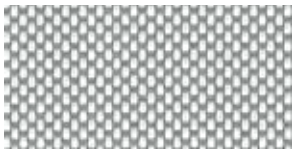
WHITE / PLATINUM

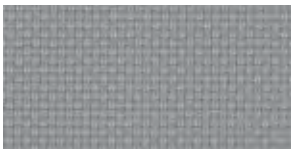
PLATINUM

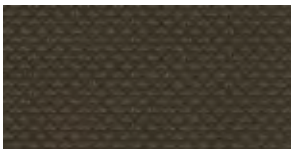
BRONZE

CHARCOAL

CHARCOAL/GRAY

CHARCOAL/CHESTNUT

Specifications

MAX. FABRIC WIDTH:	96"
ROLL LENGTH:	30 yd
FABRIC WEIGHT:	14.26 oz/yd^2
FABRIC THICKNESS:	0.019"
OPENNESS FACTOR:	5%
COMPOSITION:	63% PVC on fiberglass, 37% fiberglass
UV BLOCKAGE:	95%

FIRE CLASSIFICATION:	California Title 19 (small scale), NFPA 701-99 TM#1 (small scale), NFPA 101 (Class A Rating), UBC (Class I), ASTM-G21 and ASTM-G22 (bacterial and fungal resistance)
BREAKING STRENGTH:	warp 224 lbs fill 200 lbs
STIFFNESS:	warp 137 lbs fill 171 lbs
YARN DIAMETER:	warp 0.013" fill 0.013"

	SOLAR OPTICAL PROPERTIES				SHADING COEFFICIENT SINGLE		
COLOR	TS	RS	AS	TV	1/8CL	1/4CL	1/4HA
WHITE	20	67	13	16	0.33	0.34	0.32
WHITE/BONE	18	61	21	13	0.37	0.37	0.34
BONE	18	55	27	12	0.42	0.41	0.36
BONE/PLATINUM	12	43	45	10	0.49	0.47	0.39
WHITE/PLATINUM	13	49	38	11	0.45	0.44	0.37
PLATINUM	10	35	55	9	0.54	0.52	0.42
BRONZE	5	7	88	6	0.72	0.68	0.50
CHARCOAL	6	4	90	6	0.74	0.70	0.51
CHARCOAL GRAY	7	9	84	7	0.71	0.67	0.50
CHARCOAL CHESTNUT	6	7	87	6	0.72	0.68	0.50

TS Solar Transmittance
RS Solar Reflectance
AS Solar Absorptance
TV Visual Transmittance

1/8 CL 1/8" Clear Glass
1/4 CL 1/4" Clear Glass
1/4 HA 1/4" Heat Absorbing Glass

- The solar optical properties are used to calculate the shading coefficient.
- The shading coefficient represents the percentage of solar heat gain that is transmitted to the interior through the glass and shading system. Darker colors provide maximum glare reduction and visibility.

SheerWeave 2390 | 5% openness

Fabric is also available in: 3% openness (see SheerWeave 2410, page 95)
10% openness (see SheerWeave 2360, page 117)

OYSTER

OYSTER / BEIGE

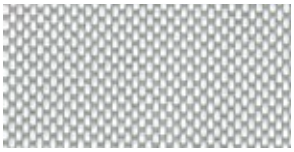
OYSTER / PEARL GRAY

BEIGE

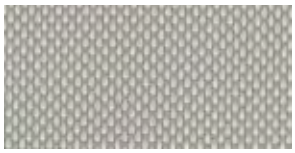
BEIGE / PEARL GRAY

PEARL GRAY

CHARCOAL / GRAY

CHARCOAL / CHESTNUT

CHARCOAL

Specifications

MAX. FABRIC WIDTH:	98"
ROLL LENGTH:	30 yd
FABRIC WEIGHT:	11.9 oz/yd^2
FABRIC THICKNESS:	0.017"
OPENNESS FACTOR:	5%
COMPOSITION:	65% PVC on fiberglass 35% fiberglass
UV BLOCKAGE:	95%

FIRE CLASSIFICATION:	California Title 19 (small scale), NFPA 701-99 TM#1 (small scale), NFPA 101 (Class A Rating), UBC (Class I), ASTM-G21 and ASTM-G22 (bacterial and fungal resistance)
BREAKING STRENGTH:	warp 250 lbs fill 235 lbs
STIFFNESS:	warp 190 Mg fill 220 Mg
YARN DIAMETER:	warp 0.011" fill 0.011"

	SOLAR OPTICAL PROPERTIES				SHADING COEFFICIENT WITH					
					SINGLE			INSULATING		
COLOR	**TS**	**RS**	**AS**	**TV**	**1/8 CL**	**1/4 CL**	**1/4 HA**	**1/2 CL**	**1CL**	**1HA**
OYSTER	21	61	18	14	0.38	0.38	0.34	0.36	0.35	0.27
OYSTER/BEIGE	17	54	29	12	0.42	0.41	0.36	0.39	0.38	0.29
OYSTER/PEARL GRAY	14	45	41	10	0.48	0.46	0.39	0.45	0.43	0.32
BEIGE	14	47	39	10	0.46	0.45	0.38	0.43	0.42	0.31
BEIGE/PEARL GRAY	11	38	51	9	0.52	0.50	0.41	0.49	0.46	0.33
PEARL GRAY	10	31	59	9	0.57	0.54	0.43	0.53	0.50	0.35
CHARCOAL/GRAY	5	9	86	6	0.70	0.67	0.49	0.66	0.60	0.41
CHARCOAL/CHESTNUT	6	6	88	6	0.73	0.69	0.50	0.68	0.62	0.42
CHARCOAL	4	4	92	5	0.73	0.69	0.51	0.69	0.63	0.43

TS Solar Transmittance
RS Solar Reflectance
AS Solar Absorptance
TV Visual Transmittance

1/8 CL 1/8" Clear Glass
1/4 CL 1/4" Clear Glass
1/4 HA 1/4" Heat Absorbing Glass

- The solar optical properties are used to calculate the shading coefficient.
- The shading coefficient represents the percentage of solar heat gain that is transmitted to the interior through the glass and shading system. Darker colors provide maximum glare reduction and visibility.

SheerWeave 2705 | 5% openness

Fabric is also available in: 1% openness (see SheerWeave 2701, page 88)
3% openness (see SheerWeave 2703, page 96)
10% openness (see SheerWeave 2710, page 118)

OYSTER

OYSTER/BEIGE

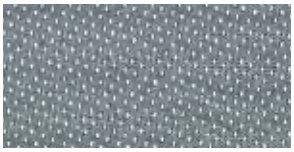

OYSTER/PEWTER

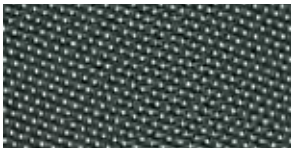

OYSTER/CHARCOAL

OYSTER/CHESTNUT

Specifications

MAX. FABRIC WIDTH:	63", 98.4"
ROLL LENGTH:	30 yd
FABRIC WEIGHT:	11.8 oz/yd^2
FABRIC THICKNESS:	0.025"
OPENNESS FACTOR:	5%

COMPOSITION:	64% PVC, 36% fiberglass
UV BLOCKAGE:	95%
FIRE CLASSIFICATION:	NFPA 701-04 TM#1, TM#2 California U.S. Title 19
BREAKING STRENGTH:	warp 279 lbs fill 240 lbs

	SOLAR OPTICAL PROPERTIES				SHADING COEFFICIENT		
					SINGLE		
COLOR	**TS**	**RS**	**AS**	**TV**	**1/8CL**	**1/4CL**	**1/4HA**
OYSTER	22	62	16	20	0.38	0.37	0.34
OYSTER/BEIGE	23	54	23	21	0.44	0.43	0.37
OYSTER/CHARCOAL	12	40	48	14	0.51	0.49	0.40
OYSTER/PEWTER	11	46	43	12	0.46	0.45	0.38
OYSTER/CHESTNUT	12	43	45	13	0.49	0.47	0.39

***** *Test results not yet available.*

TS Solar Transmittance
RS Solar Reflectance
AS Solar Absorptance
TV Visual Transmittance

1/8 CL 1/8" Clear Glass
1/4 CL 1/4" Clear Glass
1/4 HA 1/4" Heat Absorbing Glass

- The solar optical properties are used to calculate the shading coefficient.
- The shading coefficient represents the percentage of solar heat gain that is transmitted to the interior through the glass and shading system. Darker colors provide maximum glare reduction and visibility.

SheerWeave 4000 | 5% openness

Fabric is also available in: 3% openness (see SheerWeave 4400, page 97)
10% openness (see SheerWeave 4100, page 119)

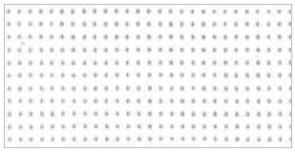
CHALK

ALABASTER

PEBBLESTONE

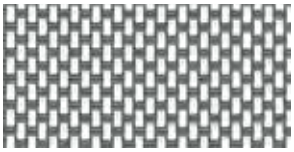
GRANITE

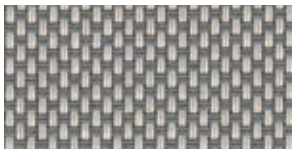
GRAYSTONE

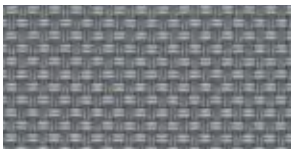
PEWTER

ASH

TOBACCO

EBONY

Specifications

MAX. FABRIC WIDTH:	98"
ROLL LENGTH:	30 yd
FABRIC WEIGHT:	19.2 oz/yd^2
FABRIC THICKNESS:	0.036"
OPENNESS FACTOR:	5%
COMPOSITION:	75% PVC on polyester 25% polyester
UV BLOCKAGE:	95%

FIRE CLASSIFICATION:	NFPA 701 (small scale), ASTM-G21 and ASTM-G22 (bacterial and fungal resistance)
BREAKING STRENGTH:	warp 315 lbs fill 260 lbs
STIFFNESS:	warp 600 Mg fill 400 Mg
STRETCH:	warp 1.0% fill 7.0%
YARN DIAMETER:	warp 0.020" fill 0.020"

	SOLAR OPTICAL PROPERTIES				SHADING COEFFICIENT WITH					
					SINGLE			INSULATING		
COLOR	**TS**	**RS**	**AS**	**TV**	**1/8 CL**	**1/4 CL**	**1/4 HA**	**1/2 CL**	**1CL**	**1HA**
CHALK	16	68	16	12	*	0.32	0.31	*	0.31	0.25
ALABASTER	15	57	28	13	*	0.39	0.35	*	0.36	0.28
PEBBLESTONE	14	49	37	12	*	0.44	0.37	*	0.41	0.30
GRANITE	11	41	48	10	*	0.48	0.40	*	0.29	0.23
GRAYSTONE	10	34	56	9	*	0.52	0.42	*	0.32	0.24
PEWTER	8	27	65	9	*	0.56	0.44	*	0.51	0.36
ASH	7	11	82	8	*	0.66	0.49	*	0.41	0.30
TOBACCO	7	5	88	8	*	0.70	0.51	*	0.44	0.31
EBONY	10	4	86	11	*	0.69	0.51	*	0.63	0.43

** Test results not yet available.*

TS Solar Transmittance
RS Solar Reflectance
AS Solar Absorptance
TV Visual Transmittance

1/8 CL 1/8" Clear Glass
1/4 CL 1/4" Clear Glass
1/4 HA 1/4" Heat Absorbing Glass

- The solar optical properties are used to calculate the shading coefficient.
- The shading coefficient represents the percentage of solar heat gain that is transmitted to the interior through the glass and shading system. Darker colors provide maximum glare reduction and visibility.

SheerWeave 4500 | 5% openness

Fabric is also available in 3% openness (see SheerWeave 4600, page 98)

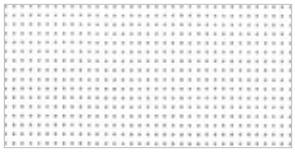
CHALK

ECRU

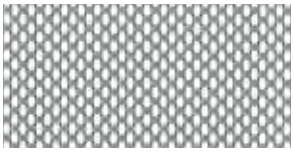
GRANITE

SANDSTONE

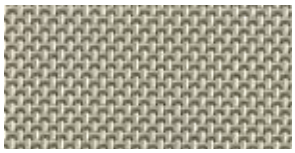
GOLDEN SAND

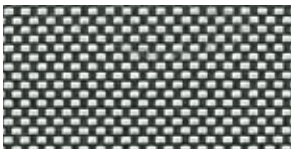
SABLE

EBONY

Specifications

MAX. FABRIC WIDTH:	98"
ROLL LENGTH	30 yd
FABRIC WEIGHT:	14.4 oz/yd^2
FABRIC THICKNESS:	0.024"
OPENNESS FACTOR:	5%
COMPOSITION:	83% PVC on polyester, 17% polyester
UV BLOCKAGE:	95%

FIRE CLASSIFICATION:	NFPA 701 (small scale)
BREAKING STRENGTH:	warp 181 lbs fill 168 lbs
STIFFNESS:	warp 240 Mg fill 190 Mg
YARN DIAMETER:	warp 0.013" fill 0.013"

	SOLAR OPTICAL PROPERTIES				SHADING COEFFICIENT WITH					
					SINGLE			INSULATING		
COLOR	**TS**	**RS**	**AS**	**TV**	**1/8 CL**	**1/4 CL**	**1/4 HA**	**1/2 CL**	**1CL**	**1HA**
CHALK	12	74	14	11	0.26	0.27	0.29	*	0.27	0.22
ECRU	9	56	35	9	0.39	0.38	0.34	*	0.38	0.28
GRANITE	6	47	47	8	0.44	0.43	0.37	*	0.41	0.30
SANDSTONE	8	40	52	9	0.50	0.48	0.40	*	0.45	0.33
GOLDEN SAND	7	37	56	8	0.52	0.50	0.40	*	0.46	0.33
SABLE	6	28	66	8	0.58	0.55	0.43	*	0.51	0.36
EBONY	5	3	92	7	0.74	0.70	0.51	*	0.63	0.43

** Test results not yet available.*

TS Solar Transmittance
RS Solar Reflectance
AS Solar Absorptance
TV Visual Transmittance

1/8 CL 1/8" Clear Glass
1/4 CL 1/4" Clear Glass
1/4 HA 1/4" Heat Absorbing Glass

- The solar optical properties are used to calculate the shading coefficient.
- The shading coefficient represents the percentage of solar heat gain that is transmitted to the interior through the glass and shading system. Darker colors provide maximum glare reduction and visibility.

SheerWeave 4550 | 5% openness

Fabric is also available in 3% openness (see SheerWeave 4650, page 99)

LINEN

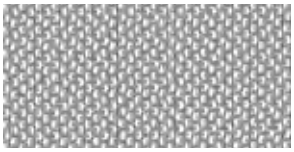

GRANITE

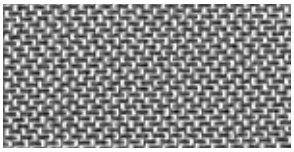

CHESTNUT

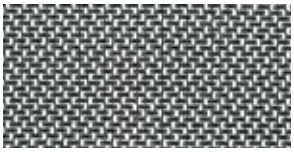

COAL

Specifications

MAX. FABRIC WIDTH:	98"
ROLL LENGTH:	30 yd
FABRIC WEIGHT:	12.5 oz/yd^2
FABRIC THICKNESS:	0.025"
OPENNESS FACTOR:	5%
COMPOSITION:	83% PVC on polyester, 17% polyester
UV BLOCKAGE:	95%

FIRE CLASSIFICATION:	NFPA 701 (small scale)
BREAKING STRENGTH:	warp 182 lbs fill 129 lbs
STIFFNESS:	warp 216 Mg fill 159 Mg
YARN DIAMETER:	warp 0.013" fill 0.013"

	SOLAR OPTICAL PROPERTIES				SHADING COEFFICIENT WITH					
					SINGLE			INSULATING		
COLOR	**TS**	**RS**	**AS**	**TV**	**1/8CL**	**1/4CL**	**1/4HA**	**1/2 CL**	**1CL**	**1HA**
LINEN	9	59	32	10	0.36	0.36	0.33	*	0.34	0.27
GRANITE	7	56	37	8	0.38	0.38	0.34	*	0.36	0.28
CHESTNUT	9	48	43	11	0.44	0.43	0.37	*	0.40	0.30
COAL	8	48	44	9	0.44	0.43	0.37	*	0.40	0.30

** Test results not yet available.*

TS Solar Transmittance
RS Solar Reflectance
AS Solar Absorptance
TV Visual Transmittance

1/8 CL 1/8" Clear Glass
1/4 CL 1/4" Clear Glass
1/4 HA 1/4" Heat Absorbing Glass

- The solar optical properties are used to calculate the shading coefficient.
- The shading coefficient represents the percentage of solar heat gain that is transmitted to the interior through the glass and shading system. Darker colors provide maximum glare reduction and visibility.

SheerWeave 5000 | 5% – 10% openness

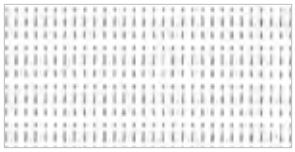

BAMBOO WHITEWASH

BAMBOO BIRCH

MARBLE SAND

Specifications

MAX. FABRIC WIDTH:	74"
ROLL LENGTH:	30 yd
MESH:	***See Chart Below***
FABRIC WEIGHT:	***See Chart Below***
FABRIC THICKNESS:	0.038"
OPENNESS FACTOR:	***See Chart Below***
COMPOSITION:	72% PVC on polyester, 28% polyester
UV BLOCKAGE:	***See Chart Below***

FIRE CLASSIFICATION:	California Title 19 (Small Scale), NFPA 701-99 TM#1 (Small and Large Scale), British Standard 5867, NFPA (Class A Rating, and UBC (Class 1)
BREAKING STRENGTH:	***See Chart Below***
STIFFNESS:	***See Chart Below***
STRETCH:	warp 1.0% fill 8.0%
YARN DIAMETER:	warp 0.018" fill 0.018"

COLOR	MESH (ENDS/IN.)	MESH WEIGHT	OPENNESS FACTOR	UV BLOCKAGE	BREAKING STRENGTH (LBS./IN.)	STIFFNESS (MG.)
BAMBOO WHITEWASH	42 warp 20 fill	14.5 (oz./yd²)	approx 10%	approx 90%	330 warp 180 fill	700 warp 500 fill
BAMBOO BIRCH	42 warp 20 fill	14.5 (oz./yd²)	approx 10%	approx 90%	330 warp 180 fill	700 warp 500 fill
MARBLE SAND	42 warp 20 fill	14.5 (oz./yd²)	approx 5%	approx 95%	330 warp 180 fill	700 warp 500 fill

	SOLAR OPTICAL PROPERTIES				SHADING COEFFICIENT WITH					
					SINGLE			INSULATING		
COLOR	TS	RS	AS	TV	1/8CL	1/4CL	1/4HA	1/2 CL	1CL	1HA
BAMBOO WHITEWASH	20	65	15	17	0.35	0.35	0.33	0.33	0.33	0.26
BAMBOO BIRCH	21	59	20	18	0.40	0.39	0.35	0.37	0.36	0.28
MARBLE SAND	9	48	43	9	0.44	0.43	0.37	0.42	0.40	0.30

TS Solar Transmittance
RS Solar Reflectance
AS Solar Absorptance
TV Visual Transmittance

1/8 CL 1/8" Clear Glass
1/4 CL 1/4" Clear Glass
1/4 HA 1/4" Heat Absorbing Glass

- The solar optical properties are used to calculate the shading coefficient.
- The shading coefficient represents the percentage of solar heat gain that is transmitted to the interior through the glass and shading system. Darker colors provide maximum glare reduction and visibility.

E Screen 7510 | 10% openness

Fabric is also available in: 1% openness (see E Screen 7501, page 85)
3% openness (see E Screen 7503, page 90)
5% openness (see E Screen 7505, page 101)

WHITE / WHITE

WHITE / LINEN

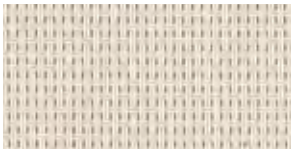
LINEN / STONE

LINEN / LINEN

WHITE / PEARL

PEARL / LINEN

PEARL / PEARL

CHARCOAL / GRAY

CHARCOAL / BRONZE

CHARCOAL / CHARCOAL

Specifications

MAX. FABRIC WIDTH:	98.4"
ROLL LENGTH:	30 yd
FABRIC WEIGHT:	10.3 oz/yd^2
FABRIC THICKNESS:	0.022"
OPENNESS FACTOR:	10%
COMPOSITION:	64% vinyl, 36% fiberglass

UV BLOCKAGE:	90-91%
FIRE CLASSIFICATION:	NFPA 701-99 TM#1 California U.S. Title 19, M1 NFP 92 503
BREAKING STRENGTH:	warp 290 lbs weft 280 lbs
YARN DIAMETER:	warp 56 ends/in weft 38 ends/in

	SOLAR OPTICAL PROPERTIES				SHADING COEFFICIENT SINGLE	
COLOR	**TS**	**RS**	**AS**	**TV**	**¼CL**	**¼HA**
WHITE/WHITE	30	57	13	23	0.43	0.37
WHITE/LINEN	28	53	19	22	0.45	0.38
LINEN/STONE	31	43	26	23	0.52	0.42
LINEN/LINEN	24	48	28	19	0.47	0.39
WHITE/PEARL	24	47	29	20	0.48	0.39
PEARL/LINEN	24	39	37	19	0.53	0.42
PEARL/PEARL	26	32	42	20	0.57	0.45
CHARCOAL/GRAY	10	8	82	12	0.68	0.50
CHARCOAL/BRONZE	13	5	82	14	0.71	0.52
CHARCOAL/CHARCOAL	11	4	85	12	0.71	0.52

** Test results not yet available.*

TS Solar Transmittance
RS Solar Reflectance
AS Solar Absorptance
TV Visual Transmittance

1/8 CL 1/8" Clear Glass
1/4 CL 1/4" Clear Glass
1/4 HA 1/4" Heat Absorbing Glass

- The solar optical properties are used to calculate the shading coefficient.
- The shading coefficient represents the percentage of solar heat gain that is transmitted to the interior through the glass and shading system. Darker colors provide maximum glare reduction and visibility.

GlacierScreen HD1010 | 10% openness

Fabric is also available in:
3% openness (see GlacierScreen HD1003, page 91)
5% openness (see GlacierScreen HD1005, page 102)

WHITE / WHITE

WHITE / LINEN

WHITE / SAND

WHITE / PEARL

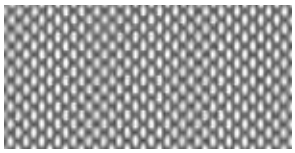
WHITE / GRAY

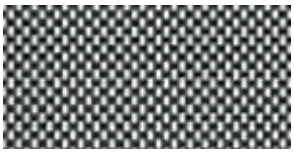
WHITE / BLACK

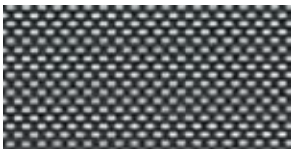
BLACK / PEARL

BLACK / BRONZE

BLACK / BLACK

Specifications

MAX. FABRIC WIDTH:	118"	OPENNESS FACTOR:	10%
ROLL LENGTH:	32.8 yd.	COMPOSITION:	78% vinyl, 22% polyester
FABRIC WEIGHT:	16.3 oz/yd^2	FIRE CLASSIFICATION:	NFPA 701-2004 TM#1
FABRIC THICKNESS:	0.026"		

	SOLAR OPTICAL PROPERTIES					SHADING COEFFICIENT WITH INSULATING		
COLOR	**Ts**	**Rs**	**As**	**Tuv**	**Tv**	**1/8CL**	**1/4CL**	**1/4HA**
WHITE/WHITE	21	67	12	4	18	0.34	0.34	0.32
WHITE/SAND	22	45	33	12	22	0.50	0.48	0.40
WHITE/LINEN	28	57	15	12	27	0.43	0.42	0.37
WHITE/PEARL	25	50	25	12	24	0.47	0.46	0.39
WHITE/GRAY	16	35	49	11	18	0.55	0.53	0.42
WHITE/BLACK	15	25	60	11	18	0.62	0.59	0.45
BLACK/PEARL	14	18	68	12	19	0.69	0.66	0.49
BLACK/BLACK	12	4	84	12	18	0.75	0.71	0.52
BLACK/BRONZE	13	7	80	12	18	0.74	0.70	0.51

TS Solar Transmittance
RS Solar Reflectance
AS Solar Absorptance
Tuv Ultraviolet Transmittance
TV Visual Transmittance

1/8 CL 1/8" Clear Glass
1/4 CL 1/4" Clear Glass
1/4 HA 1/4" Heat Absorbing Glass

- The solar optical properties are used to calculate the shading coefficient.
- The shading coefficient represents the percentage of solar heat gain that is transmitted to the interior through the glass and shading system. Darker colors provide maximum glare reduction and visibility.

New Orleans | 10% openness

RIVERBOAT WHITE

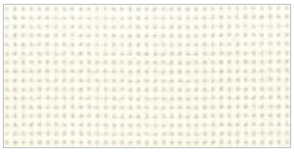
MAGNOLIA

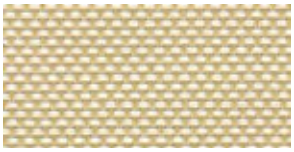
CHICORY

DIJON

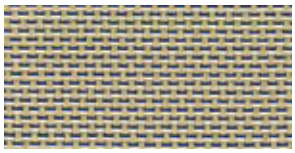
VANILLA BELLE

WROUGHT IRON

Specifications

MAX. FABRIC WIDTH:	98"
ROLL LENGTH:	55 yd
FABRIC WEIGHT:	11.79 oz/yd^2
FABRIC THICKNESS:	0.022"
OPENNESS FACTOR:	10%
COMPOSITION:	66% PVC, 34% fiberglass

UV BLOCKAGE:	90%
FIRE CLASSIFICATION:	NFPA 701 (small scale)
BREAKING STRENGTH:	warp 150 lbs weft 140 lbs
YARN DIAMETER:	0.0114"

	SOLAR OPTICAL PROPERTIES				SHADING COEFFICIENT WITH					
					SINGLE			INSULATING		
COLOR	**TS**	**RS**	**AS**	**TV**	**1/8 CL**	**1/4 CL**	**1/4 HA**	**1/2 CL**	**1CL**	**1HA**
RIVERBOAT WHITE	26	58	16	21	*	0.41	0.36	0.38	*	0.29
MAGNOLIA	21	58	21	17	*	0.40	0.35	0.37	*	0.28
CHICORY	20	48	32	16	*	0.46	0.39	0.42	*	0.31
DIJON	17	40	43	15	*	0.50	0.41	0.46	*	0.33
VANILLA BELLE	17	40	43	15	*	0.50	0.41	0.46	*	0.33
WROUGHT IRON	11	4	85	13	*	0.71	0.52	0.64	*	0.43

** Test results not yet available.*

TS Solar Transmittance
RS Solar Reflectance
AS Solar Absorptance
TV Visual Transmittance

1/8 CL 1/8" Clear Glass
1/4 CL 1/4" Clear Glass
1/4 HA 1/4" Heat Absorbing Glass

- The solar optical properties are used to calculate the shading coefficient.
- The shading coefficient represents the percentage of solar heat gain that is transmitted to the interior through the glass and shading system. Darker colors provide maximum glare reduction and visibility.

SheerWeave 2100 | 10% openness

Fabric is also available in 5% openness (see SheerWeave 2000, page 106)

WHITE

WHITE / BONE

BONE

BONE / PLATINUM

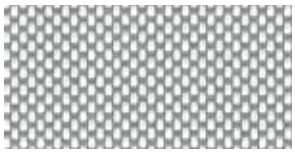
WHITE / PLATINUM

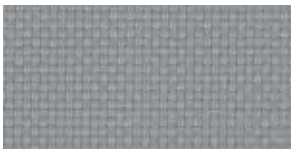
PLATINUM

CHARCOAL / GRAY

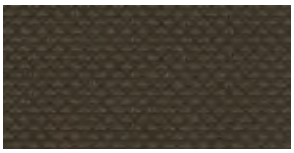
BRONZE

CHARCOAL / CHESTNUT

CHARCOAL

Specifications

MAX. FABRIC WIDTH:	96"
ROLL LENGTH:	30 yd
FABRIC WEIGHT:	12.4 oz/yd^2
FABRIC THICKNESS:	0.020"
OPENNESS FACTOR:	10%
COMPOSITION:	63% PVC on fiberglass, 37% fiberglass
UV BLOCKAGE:	90%

FIRE CLASSIFICATION:	California Title 19 (small scale), NFPA 701-99 TM#1 (small scale), NFPA 101 (Class A Rating), UBC (Class I), ASTM-G21 and ASTM-G22 (bacterial and fungal resistance)
BREAKING STRENGTH:	warp 260 lbs fill 200 lbs
STIFFNESS:	warp 200 Mg fill 240 Mg
YARN DIAMETER:	warp 0.013" fill 0.013"

	SOLAR OPTICAL PROPERTIES				SHADING COEFFICIENT		
					SINGLE		
COLOR	**TS**	**RS**	**AS**	**TV**	**1/8CL**	**1/4CL**	**1/4HA**
WHITE	22	60	18	16	0.39	0.39	0.35
WHITE/BONE	19	54	27	14	0.43	0.42	0.36
BONE	19	44	37	15	0.50	0.48	0.40
BONE/PLATINUM	16	38	46	14	0.53	0.51	0.41
WHITE/PLATINUM	16	47	37	12	0.47	0.46	0.38
PLATINUM	10	31	59	9	0.59	0.54	0.43
CHARCOAL/GRAY	11	8	81	12	0.72	0.69	0.50
BRONZE	8	5	87	9	0.74	0.70	0.51
CHARCOAL/CHESTNUT	11	6	83	12	0.74	0.70	0.51
CHARCOAL	9	4	87	10	0.75	0.71	0.51

TS Solar Transmittance
RS Solar Reflectance
AS Solar Absorptance
TV Visual Transmittance

1/8 CL 1/8" Clear Glass
1/4 CL 1/4" Clear Glass
1/4 HA 1/4" Heat Absorbing Glass

- The solar optical properties are used to calculate the shading coefficient.
- The shading coefficient represents the percentage of solar heat gain that is transmitted to the interior through the glass and shading system. Darker colors provide maximum glare reduction and visibility.

SheerWeave 2360 | 10% openness

Fabric is also available in: 3% openness (see SheerWeave 2410, page 95)
5% openness (see SheerWeave 2390, page 107)

OYSTER

OYSTER / BEIGE

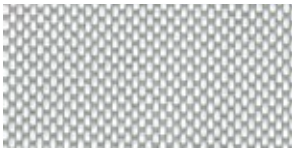
OYSTER / PEARL GRAY

BEIGE

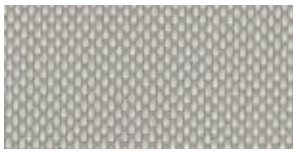
BEIGE / PEARL GRAY

PEARL GRAY

CHARCOAL / GRAY

CHARCOAL / CHESTNUT

CHARCOAL

Specifications

MAX. FABRIC WIDTH:	98"
ROLL LENGTH	30 yd
FABRIC WEIGHT:	10.5 oz/yd²
FABRIC THICKNESS:	0.017"
OPENNESS FACTOR:	10%
COMPOSITION:	63% PVC on fiberglass, 37% fiberglass
UV BLOCKAGE:	90%

FIRE CLASSIFICATION:	California Title 19 (small scale), NFPA 701-99 TM#1 (small scale), NFPA 101 (Class A Rating), UBC (Class I), ASTM-G21 and ASTM-G22 (bacterial and fungal resistance)
BREAKING STRENGTH:	warp 255 lbs fill 180 lb.
STIFFNESS:	warp 225 Mg fill 200 Mg
YARN DIAMETER:	warp 0.011" fill 0.011"

	SOLAR OPTICAL PROPERTIES				SHADING COEFFICIENT WITH					
					SINGLE			INSULATING		
COLOR	TS	RS	AS	TV	1/8 CL	1/4 CL	1/4 HA	1/2 CL	1CL	1HA
OYSTER	27	57	16	21	0.43	0.42	0.36	0.39	0.38	0.29
OYSTER/BEIGE	24	51	25	19	0.46	0.45	0.38	0.43	0.41	0.31
OYSTER/PEARL GRAY	20	45	35	16	0.49	0.48	0.40	0.46	0.44	0.32
BEIGE	19	44	37	16	0.50	0.48	0.40	0.46	0.44	0.32
BEIGE/PEARL GRAY	17	39	44	15	0.53	0.51	0.41	0.49	0.46	0.34
PEARL GRAY	16	30	54	14	0.59	0.56	0.44	0.55	0.51	0.36
CHARCOAL/GRAY	12	8	80	14	0.73	0.69	0.51	0.68	0.62	0.42
CHARCOAL/CHESTNUT	11	5	84	12	0.74	0.70	0.51	0.69	0.63	0.43
CHARCOAL	10	4	86	11	0.75	0.71	0.52	0.70	0.64	0.43

TS Solar Transmittance
RS Solar Reflectance
AS Solar Absorptance
TV Visual Transmittance

1/8 CL 1/8" Clear Glass
1/4 CL 1/4" Clear Glass
1/4 HA 1/4" Heat Absorbing Glass

- The solar optical properties are used to calculate the shading coefficient.
- The shading coefficient represents the percentage of solar heat gain that is transmitted to the interior through the glass and shading system. Darker colors provide maximum glare reduction and visibility.

SheerWeave 2710 | 10% openness

Fabric is also available in: 1% openness (see SheerWeave 2701, page 88)
3% openness (see SheerWeave 2703, page 96)
5% openness (see SheerWeave 2705, page 108)

OYSTER

OYSTER/BEIGE

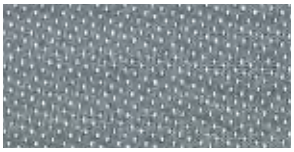
OYSTER/PEWTER

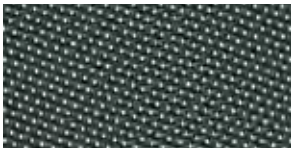
OYSTER/CHARCOAL

OYSTER/CHESTNUT

Specifications

MAX. FABRIC WIDTH:	63", 98.4"
ROLL LENGTH:	30 yd
FABRIC WEIGHT:	10.4 oz/yd^2
FABRIC THICKNESS:	0.025”
OPENNESS FACTOR:	10%

COMPOSITION:	64% PVC, 36% fiberglass
UV BLOCKAGE:	90%
FIRE CLASSIFICATION:	NFPA 701-04 TM#1, TM#2 California U.S. Title 19
BREAKING STRENGTH:	warp 280 lbs fill 220 lbs

	SOLAR OPTICAL PROPERTIES				SHADING COEFFICIENT		
					SINGLE		
COLOR	**TS**	**RS**	**AS**	**TV**	**1/8CL**	**1/4CL**	**1/4HA**
OYSTER	34	54	12	32	0.46	0.45	0.38
OYSTER/BEIGE	29	51	20	28	0.47	0.46	0.39
OYSTER/CHARCOAL	21	37	42	24	0.55	0.53	0.42
OYSTER/PEWTER	24	43	33	25	0.52	0.50	0.41
OYSTER/CHESTNUT	25	41	34	26	0.53	0.52	0.42

***** *Test results not yet available.*

TS Solar Transmittance
RS Solar Reflectance
AS Solar Absorptance
TV Visual Transmittance

1/8 CL 1/8" Clear Glass
1/4 CL 1/4" Clear Glass
1/4 HA 1/4" Heat Absorbing Glass

- The solar optical properties are used to calculate the shading coefficient.
- The shading coefficient represents the percentage of solar heat gain that is transmitted to the interior through the glass and shading system. Darker colors provide maximum glare reduction and visibility.

SheerWeave 4100 | 10% openness

Fabric is also available in: 3% openness (see SheerWeave 4400, page 97)
5% openness (see SheerWeave 4000, page 109)

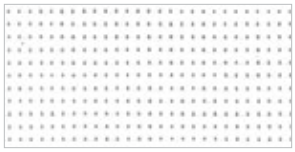
CHALK

ALABASTER

PEBBLESTONE

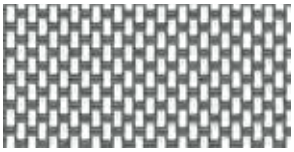
GRANITE

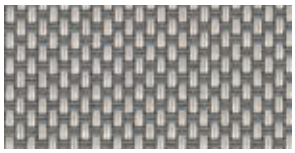
GRAYSTONE

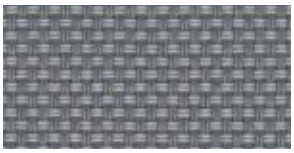
PEWTER

ASH

TOBACCO

EBONY

Specifications

MAX. FABRIC WIDTH:	98"
ROLL LENGTH:	30 yd
FABRIC WEIGHT:	17.5 oz/yd^2
FABRIC THICKNESS:	0.035"
OPENNESS FACTOR:	10%
COMPOSITION:	75% PVC on polyester, 25% polyester
UV BLOCKAGE:	90%

FIRE CLASSIFICATION:	NFPA 701 (small scale)
BREAKING STRENGTH:	warp 315 lbs fill 230 lbs
STIFFNESS:	warp 600 Mg fill 350 Mg
STRETCH:	warp 1.0% fill 8.0%
YARN DIAMETER:	0.020"

	SOLAR OPTICAL PROPERTIES				SHADING COEFFICIENT WITH					
					SINGLE			INSULATING		
COLOR	**TS**	**RS**	**AS**	**TV**	**1/8 CL**	**1/4 CL**	**1/4 HA**	**1/2 CL**	**1CL**	**1HA**
CHALK	18	66	16	15	*	0.34	0.32	*	0.32	0.25
ALABASTER	19	56	25	16	*	0.41	0.36	*	0.38	0.29
PEBBLESTONE	16	48	36	15	*	0.45	0.38	*	0.41	0.31
GRANITE	15	42	43	14	*	0.49	0.40	*	0.29	0.23
GRAYSTONE	14	35	51	14	*	0.53	0.42	*	0.48	0.34
PEWTER	12	26	62	14	*	0.58	0.45	*	0.53	0.37
ASH	10	10	80	11	*	0.67	0.50	*	0.42	0.31
TOBACCO	10	5	85	11	*	0.70	0.51	*	0.45	0.32
EBONY	10	4	86	11	*	0.71	0.52	*	0.64	0.43

** Test results not yet available.*

TS Solar Transmittance
RS Solar Reflectance
AS Solar Absorptance
TV Visual Transmittance

1/8 CL 1/8" Clear Glass
1/4 CL 1/4" Clear Glass
1/4 HA 1/4" Heat Absorbing Glass

- The solar optical properties are used to calculate the shading coefficient.
- The shading coefficient represents the percentage of solar heat gain that is transmitted to the interior through the glass and shading system. Darker colors provide maximum glare reduction and visibility.

SheerWeave 3000 | 14% openness

PEARL WHITE

MUSHROOM SAND

CUSTARD CREAM

SAND DOLLAR

HONEY SAGE

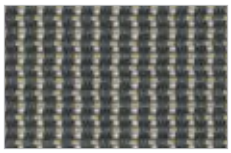
HARVEST WHEAT

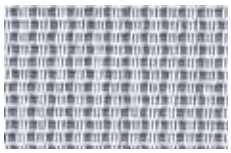
PALE GRAY

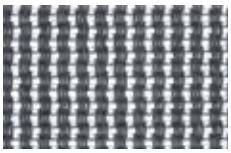
SPANISH GRAY

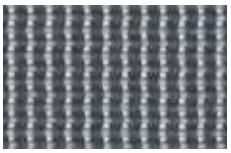
DUSTY GRAY

MOSSY GREEN

NINJA GRAY

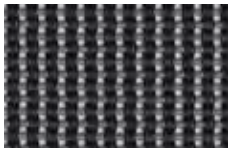
ESPRESSO

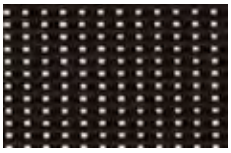
CHOCOLATE

Specifications

MAX. FABRIC WIDTH:	96"
ROLL LENGTH:	30 yd
FABRIC WEIGHT:	13.46 oz/yd^2
FABRIC THICKNESS:	0.028”
OPENNESS FACTOR:	14%
UV BLOCKAGE:	86%

COMPOSITION:	65% PVC on fiberglass, 35% fiberglass 69% PVC on polyester, 31% polyester
FIRE CLASSIFICATION:	NFPA 701-99 TM#1 (small scale), CCC-C-521E (type 11 fiberglass), A-A150, ASTM-G21 and ASTM-G22 (bacterial and fungal resistance)

BREAKING STRENGTH:	warp 250 lbs fill 262 lbs
STIFFNESS:	warp 291 Mg fill 318 Mg
STRETCH:	warp 0.7% fill 0.8%
YARN DIAMETER:	warp 0.011" fill 0.022"

	SOLAR OPTICAL PROPERTIES				SHADING COEFFICIENT		
					SINGLE		
COLOR	**TS**	**RS**	**AS**	**TV**	**1/8CL**	**1/4CL**	**1/4HA**
PEARL WHITE	24	62	14	20	0.38	0.38	0.34
MUSHROOM SAND	23	46	31	21	0.49	0.48	0.40
CUSTARD CREAM	24	52	24	22	0.45	0.44	0.38
SAND DOLLAR	26	40	34	24	0.54	0.52	0.42
HONEY SAGE	22	28	50	22	0.62	0.59	0.45
HARVEST WHEAT	19	16	65	20	0.69	0.66	0.49
PALE GRAY	20	42	38	19	0.51	0.50	0.41
SPANISH GRAY	14	25	61	15	0.62	0.59	0.45
DUSTY GRAY	16	17	67	16	0.68	0.64	0.48
MOSSY GREEN	18	16	66	20	0.69	0.65	0.49
NINJA GRAY	14	10	76	16	0.72	0.68	0.50
ESPRESSO	19	8	73	21	0.74	0.70	0.52
CHOCOLATE	14	5	81	17	0.75	0.71	0.52

TS Solar Transmittance
RS Solar Reflectance
AS Solar Absorptance
TV Visual Transmittance

1/8 CL 1/8" Clear Glass
1/4 CL 1/4" Clear Glass
1/4 HA 1/4" Heat Absorbing Glass

- The solar optical properties are used to calculate the shading coefficient.
- The shading coefficient represents the percentage of solar heat gain that is transmitted to the interior through the glass and shading system. Darker colors provide maximum glare reduction and visibility.

U.S. Citizenship and Immigration Services

ABOUT HUNTER DOUGLAS

For the last 60 years, we've been fortunate enough to help turn countless innovative sketches into innovative buildings. Architects and designers from around the world have taken advantage of Hunter Douglas' unmatched project development, service, and support. Chances are, you've seen more of Hunter Douglas than you think. Just look around. With major operation centers in North America, Europe, Latin America, Asia and Australia, we've contributed to thousands of high-profile installations, from retail and commercial facilities to major transit centers and government buildings. Not only are the world's architects and designers our partners, they're our inspiration. As they continue to raise the bar for excellence, we're creating projects to bring their visions to life.

COMMITMENT TO SUSTAINABILITY

From products, to processes, to philanthropy, environmental responsibility is a core Hunter Douglas value. We are the worldwide leader in creating innovative, energy-efficient window fashions. Our commitment to minimizing our own impact on the environment includes aggressive plans to reduce energy consumption by 15%, water usage by 40%, and overall carbon emissions by 20% over a three-year period.

FOR MORE INFORMATION

- 800.727.8953
- www.hunterdouglascontract.com/windowcoverings

HunterDouglasContract

WINDOW COVERINGS | CEILINGS | SOLAR CONTROL | FAÇADES

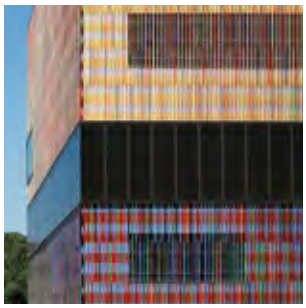

This brochure was printed using:

50% Recycled.
25% Post Consumer Waste

Mixed Sources

By using post consumer recycled fiber in lieu of virgin fiber paper stock:

17 trees were preserved for the future.
48 lbs. of water-borne waste were not created.
7,108 gallons of waste water flow were saved.
786 lbs. of solid waste were not generated.
1,548 lbs. of net greenhouse gases were prevented.
11,852,400 BTUs of energy were not consumed.

Hunter Douglas Contract Window Coverings
12250 Parkway Centre Drive, Poway, CA 92064
Customer Service: 800.727.8953
Fax: 800.205.9819
www.hunterdouglascontract.com/windowcoverings

CONRB500SC2010

©2010 Hunter Douglas. ® and ™ are trademarks of Hunter Douglas.